Explosion Proof General Purpose Solenoid Valve SF1010 Series (G1/8", G1/4")

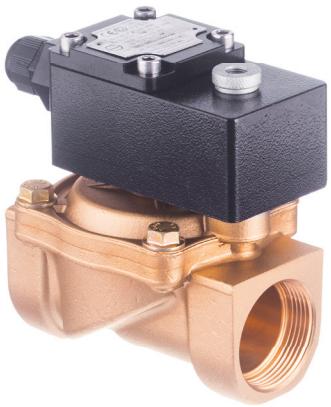

NORMALLY CLOSED
2/2 WAY
DIRECT ACTING
ΔP=0

EXPLOSION AREA
ATEX

GENERAL FEATURES

- Wide pressure range, a flow rate and orifice options.
- Solenoid valves are used with the filter.
- Solenoid valves can be mounted in any position without affecting its operation.
- Coil to be used in a vertical position.

ELECTRICAL CHARACTERISTICS

Continuous Duty : ED %100
Coil Insulation Class : H (180°C)(IEC 85)
Coil Impregnation : Polyester Fiber Glass
Ambient Temperature : -20°C, +60°C
Protection Degree : IP65 (ISO 60529) On request; IP68
Electric Plug Connection : DIN 46340 3- Poles Connector (DIN43650)
Connector Specification : ISO 4400 / EN 175301-803 Form A, Spade Plug (Cable Ø6-8 mm)
Electrical Safety : IEC 335
Standard Voltages : AC 12V 15VA, 24V 15VA, 48V, 15VA, 110V 15VA, 230V 15VA, 230V 24VA
DC 12V 18W, 24V 18W, 48V,18W, 110V 18W
On request other voltages
Voltages Tolerance : AC -15%, +10% DC -5%, +10%
Frequency : 50 Hz (60 Hz...)
On request; Connector with LED, PWM Socket Specify coil voltage with order

MATERIALS IN CONTACT WITH FLUID

Body : Brass
Internal Parts : Stainless Steel
Sealing : NBR(On request; EPDM, VITON, PTFE)
Shading Ring : Copper (EN 12735-1)
Seats, Core Tube, Springs : Stainless Steel

OPTIONS

Female connection: BSP; (On request NPT)

- On request CR-Ni plated, PTFE coated done
- On request Atex (exproof) coil.

TECHNICAL FEATURES

Max. Viscosity : 5°E (~37cST veya mm^2/s)
Response Time : Opening time : 30 ms
Closing Time : 30 ms

SEALS FEATURES

NBR : -20°C...+80°C
EPDM : -30°C...+130°C
VİTON : -20°C...+160°C
PTFE : -10°C...+160°C
RUBY : -10°C...+160°C

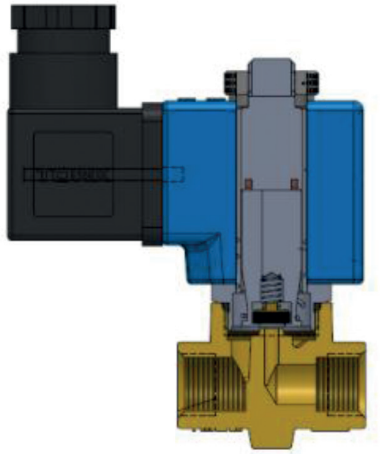

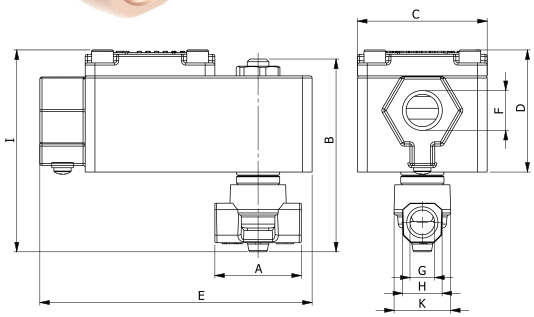

Dimensions (mm)									
G	A	B	C	D	E	F	H	I	K
1/8"	40	90	60	57	128	M20X1,5	19	95	27
1/4"	40	90	60	57	128	M20X1,5	19	95	27

Coils	Nominal Values	Cold/ Hot	Inrush	Holding	Current (A)	Surface Temperature (°C)
C43012VDC18W	12VDC 18W	COLD	19,56	19,56	1,63	20
		HOT	14,52	14,52	1,21	106
C43024VDC18W	24VDC 18W	COLD	20,88	20,88	0,87	25
		HOT	14,64	14,64	0,61	116
C43110VDC18W	110VDC 18W	COLD	19,96	19,96	0,18	23
		HOT	13,56	13,56	0,123	115
C43012VAC15VA	12VAC 15VA	COLD	23,81	16,43	1,3	25
		HOT	-	15,86	1,262	79
C43024VAC15VA	24VAC 15VA	COLD	25,82	15,02	0,62	22
		HOT	-	13,91	0,57	81
C430110VAC15VA	110VAC 15VA	COLD	30,65	15,17	0,137	24
		HOT	-	13,96	0,126	80
C43230VAC15VA	230VAC 15VA	HOT	31,4	15,64	0,068	25
		HOT	-	14,41	0,063	80
C43230VAC24VA	230VAC 24VA	COLD	45,1	23,92	0,0154	23
		HOT	-	21,62	0,0154	100

Solenoid Vave Symbol	Valve Type/ Order No	Connection Size	Orifice Size	Pressure min/max		Kv	Seal				Weight
								Opsiyon			
	SF1010	G	mm	Bar	Bar	l/min	NBR	Viton	EPDM	PTFE	kg
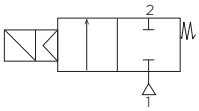	SF1010.00.018	1/8"	1.8	0	16	1.6	✓	✓	✓	✓	0,36
	SF1010.00.025	1/8"	2.5	0	12	3.2	✓	✓	✓	✓	0,36
	SF1010.00.030	1/8"	3	0	10	4.6	✓	✓	✓	✓	0,36
	SF1010.00.040	1/8"	4	0	9	6.4	✓	✓	✓	✓	0,36
	SF1010.00.050	1/8"	5	0	7	9.2	✓	✓	✓	✓	0,36
	SF1010.00.060	1/8"	6	0	5	11	✓	✓	✓	✓	0,36
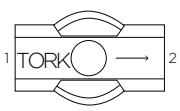	SF1010.01.018	1/4"	1.8	0	16	1.6	✓	✓	✓	✓	0,35
	SF1010.01.025	1/4"	2.5	0	12	3.2	✓	✓	✓	✓	0,35
	SF1010.01.030	1/4"	3	0	10	4.6	✓	✓	✓	✓	0,35
	SF1010.01.040	1/4"	4	0	9	6.4	✓	✓	✓	✓	0,35
	SF1010.01.050	1/4"	5	0	7	9.2	✓	✓	✓	✓	0,35
	SF1010.01.060	1/4"	6	0	5	11	✓	✓	✓	✓	0,35

Not: Please look catalogues for more details

STANDARDS

- Standard tube connection G (BSP) (ISO 228-1) and other tube connections (NPT (ANSI 1.20.3)) are available on request.
- TORK solenoid valves 97/23/EC, are available for pressure equipment directive (PED) and 2006/95/ECC low voltage directive (LVD).

Explosion Proof General Purpose Solenoid Valve
SF1010 Series (G3/8", G1/2", G3/4",G1", G11/4", G11/2", G2")

NORMALLY CLOSED
2/2 WAY
PILOT OPERATED
ΔP=0.5

EXPLOSION AREA
ATEX

GENERAL FEATURES
- Wide pressure range, flow rate and orifis options.
- Solenoid valfs are used with filters.
- Solenoid valves can be mounted in any position without affecting its operation.
- Coil to be used in a vertical position.

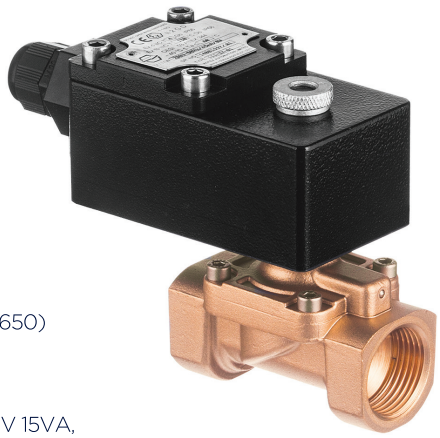

ELECTRICAL CHARACTERISTICS
Continuous Duty : ED %100
Coil Insulation Class : H (180°C)(IEC 85)
Coil Impregnation : Polyester Fiber Glass
Ambient Temperature : -20°C, +60°C
Protection Degree : IP65 (ISO 60529) On request;IP68
Electric Plug Connection : DIN 46340 3- Poles Connector(DIN43650)
Connector Specification : ISO 4400 / EN 175301-803 Form A, Spade Plug (Cable Ø6-8 mm)
Electrical Safety : IEC 335
Standard Voltages : AC 12V 15VA, 24V 15VA, 48V, 15VA, 110V 15VA, 230V 15VA, 230V 24VA
DC 12V 18W, 24V 18W, 48V,18W, 110V 18W
On request other voltages
Voltages Tolerance : AC -15%, +10% DC -5%, +10%
Frequency : 50 Hz (60 Hz...)
On request; Connector with LED, PWM Socket
Specify coil voltage with order

MATERIALS IN CONTACT WITH FLUID
Body : Brass
Internal Parts : Stainless Steel, Brass
Sealing : NBR(On request; EPDM, VITON)
Shading Ring : Copper (EN 12735-1)
Seats, Core Tube, Springs: Stainless Steel

OPTIONS
Female connection: BSP; (On request NPT)
- On request CR-Ni plated, PTFE coated done
- On request Atex (exproof) coil.

TECHNICAL FEATURES
Max. Viscosity : 5°E (~37cST veya mm²/s)
Response Time : Opening time : 400 ms- 1600 ms
Closing Time : 1000 ms- 2000 ms

SEALS FEATURES
NBR : -20°C...+80°C
EPDM : -30°C...+130°C
VİTON : -20°C...+160°C
PTFE : -10°C...+160°C
RUBY : -10°C...+160°C

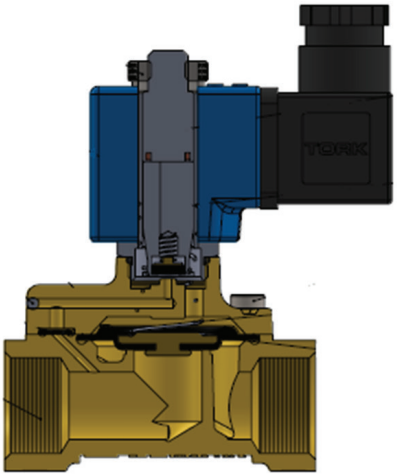

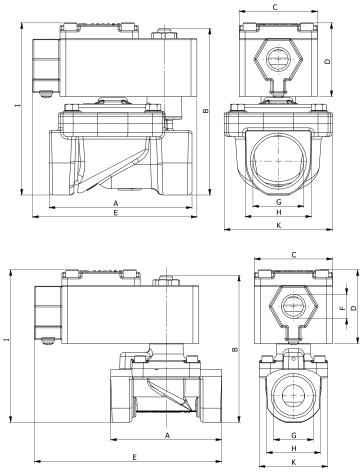

Dimensions (mm)									
G	A	B	C	D	E	F	H	I	K
3/8"	72	100	60	57	135	M20X1,5	23	103	53
1/2"	83	102	60	57	140	M20X1,5	27	105	53
3/4"	83	110	60	57	140	M20X1,5	32	115	53
1"	85	115	60	57	145	M20X1,5	42	120	53
11/4"	110	128	60	57	126	M20X1,5	51	132	83
11/2"	130	143	60	57	130	M20X1,5	58	144	95
2"	149	155	60	57	149	M20X1,5	75	115	100

Coils	Nominal Values	Cold/ Hot	Inrush	Holding	Current (A)	Surface Temperature (°C)
C43012VDC18W	12VDC 18W	COLD	19,56	19,56	1,63	20
		HOT	14,52	14,52	1,21	106
C43024VDC18W	24VDC 18W	COLD	20,88	20,88	0,87	25
		HOT	14,64	14,64	0,61	116
C43110VDC18W	110VDC 18W	COLD	19,96	19,96	0,18	23
		HOT	13,56	13,56	0,123	115
C43012VAC15VA	12VAC 15VA	COLD	23,81	16,43	1,3	25
		HOT	-	15,86	1,262	79
C43024VAC15VA	24VAC 15VA	COLD	25,82	15,02	0,62	22
		HOT	-	13,91	0,57	81
C43110VAC15VA	110VAC 15VA	COLD	30,65	15,17	0,137	24
		HOT	-	13,96	0,126	80
C43230VAC15VA	230VAC 15VA	COLD	31,4	15,64	0,068	25
		HOT	-	14,41	0,063	80
C43230VAC15VA	230VAC 24VA	COLD	45,1	23,92	0,0154	23
		HOT	-	21,62	0,0154	100

Solenoid Vave Symbol	Valve Type/ Order No	Connection Size	Orifice Size	Pressure min/max		Kv	Seal			Weight
								Opsiyon		
	SF1010	G	mm	Bar	Bar	l/min	NBR	Viton	EPDM	kg
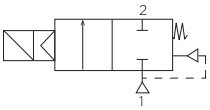	SF1010.02.125	3/8"	12.5	0.5	16	48	✓	✓	✓	0,69
	SF1010.03.145	1/2"	14.5	0.5	16	70	✓	✓	✓	0,73
	SF1010.04.170	3/4"	17	0.5	16	90	✓	✓	✓	0,81
	SF1010.05.170	1"	17	0.5	16	90	✓	✓	✓	0,98
	SF1010.06.300	11/4"	30	0.5	12	250	✓	✓	✓	2,65
	SF1010.07.390	11/2"	39	0.5	12	370	✓	✓	✓	2,55
	SF1010.08.460	2"	46	0.5	12	450	✓	✓	✓	2,98

Not: Please look catalogues for more details

STANDARDS
- Standard tube connection G (BSP) (ISO 228-1) and other tube connections (NPT (ANSI 1.20.3)) are available on request.
- TORK solenoid valves 97/23/EC, are available for pressure equipment directive (PED) and 2006/95/ECC low voltage directive (LVD).

TSSF1010EN2610O1