# General Purpose Solenoid Valves S1060 Series (G1/8", G1/4")

**NORMALLY CLOSED**
**2/2 WAY**
**DIRECT ACTING**
**ΔP=0**

WATER AIR GAS

## GENERAL FEATURES
- Wide pressure range, flow rate and orifis options.
- Solenoid valves are used with filters.
- Solenoid valves can be mounted in any position without affecting its operation.
- Coil to be used in a vertical position.

## ELECTRICAL CHARACTERISTICS
Continuous Duty : ED %100
Coil Insulation Class : H (180°C)(IEC 85)
Coil Impregnation : Polyester Fiber Glass
Ambient Temperature : -20°C, +60°C
Protection Degree : IP65 (ISO 60529)
Electric Plug Connection : DIN 46340 3-Poles Connector (DIN 43650)
Electrical Safety : IEC 335
Standard Voltages : AC 7,1 VA 12V, 24V, 48V, 110V, 230V, 230V
DC 5W 12V, 24V, 48V, 110V
Voltages Tolerance : AC -15%, +10%
DC -5%, +10%
Frequency : 50 Hz (60 Hz...)
On request; Connector with LED.
Specify coil voltage with order.




## MATERIALS IN CONTACT WITH FLUID
Body : Brass
Internal Parts : Stainless Steel, Brass
Sealing : Viton On request; ; EPDM, NBR
Shading Ring : Copper (EN 12735-1)
Seats, Core Tube, Springs: Stainless Steel, Brass

## OPTIONS
Female connection: BSP; (On request NPT)
- On request CR-Ni plated, PTFE coated done
- On request Atex (exproof) coil.

## TECHNICAL FEATURES
Max. Viscosity : 5°E (~37cST veya $mm^2/s$)
Response Time : Opening time : 30 ms
Closing Time : 30 ms

## SEALS FEATURES
NBR : -20°C...+80°C
EPDM : -30°C...+130°C
VİTON : -20°C...+160°C
PTFE : -10°C...+160°C
RUBY : -10°C...+160°C

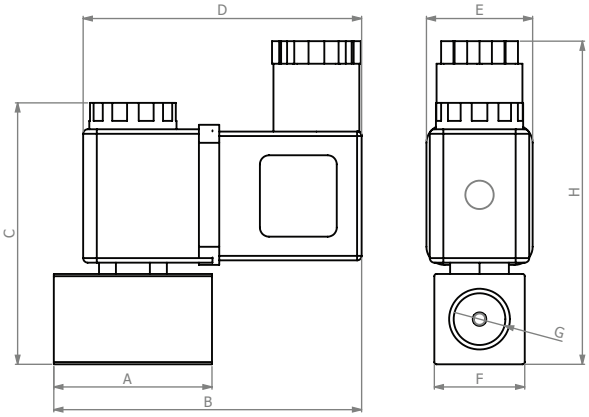


| Dimensions (mm) | | | | | | | |
|---|---|---|---|---|---|---|---|
| G | A | B | C | D | E | F | H |
| 1/8" | 35 | 66,77 | 56 | 64.1 | 22 | 20 | 70 |
| 1/4" | 36 | 66,77 | 56 | 64.1 | 22 | 20 | 70 |

| Solenoid Vave Symbol | Valve Type/ Order No | Connection Size | Orifice Size | Pressure min/max | | Kv | Seal | | | Weight |
|---|---|---|---|---|---|---|---|---|---|---|
| | | | | | | | | Option | | |
| | S1060 | G | mm | Bar | Bar | l/min | Viton | NBR | EPDM | kg |
| 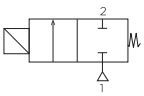 | S1060.00.018 | 1/8" | 1.8 | 0 | 16 | 1.6 | ✓ | ✓ | ✓ | 0,2 |
| | S1060.00.025 | 1/8" | 2.5 | 0 | 12 | 3.2 | ✓ | ✓ | ✓ | 0,19 |
| | S1060.01.018 | 1/4" | 1.8 | 0 | 16 | 1.6 | ✓ | ✓ | ✓ | 0,19 |
| | S1060.01.025 | 1/4" | 2.5 | 0 | 12 | 3.2 | ✓ | ✓ | ✓ | 0,19 |
| | S1060.01.030 | 1/4" | 3 | 0 | 10 | 4.6 | ✓ | ✓ | ✓ | 0,19 |



**STANDARDS**
- Standard tube connection G (BSP) (ISO 228-1) and other tube connections (NPT (ANSI 1.20.3)) are available on request.
- TORK solenoid valves 97/23/EC, are available for pressure equipment directive (PED) and 2006/95/ECC low voltage directive (LVD).

**Not:** Please look catalogues for more details

# General Purpose Solenoid Valves
# S1060 Series (G3/8", G1/2", G3/4",)




NORMALLY CLOSED
2/2 OPERATED
PILOT OPERATED
ΔP=0.5

WATER AIR GAS

## GENERAL FEATURES
- Wide pressure range, flow rate and orifis options.
- Solenoid valves are used with filters.
- Solenoid valves can be mounted in any position without affecting its operation.
- Coil to be used in a vertical position.

## ELECTRICAL CHARACTERISTICS
Continuous Duty : ED %100
Coil Insulation Class : H (180°C)(IEC 85)
Coil Impregnation : Polyester Fiber Glass
Ambient Temperature : -20°C, +60°C
Protection Degree : IP65 (ISO 60529) On request; IP68
Electric Plug Connection : DIN 46340 3-Poles Connector (DIN 43650)
Electrical Safety : IEC 335
Standard Voltages : AC 7,1 VA 12V, 24V, 48V, 110V, 230V, 230V
DC 5W 12V, 24V, 48V, 110V
Voltages Tolerance : AC -15%, +10%
DC -5%, +10%
Frequency : 50 Hz (60 Hz...)
On request; Connector with LED.
Specify coil voltage with order.

## MATERIALS IN CONTACT WITH FLUID
Body : Brass
Internal Parts : Stainless Steel, Brass
Sealing : Viton On request; ; EPDM, NBR
Shading Ring : Copper (EN 12735-1)
Seats, Core Tube, Springs: Stainless Steel, Brass

## OPTIONS
Female connection: BSP; (On request NPT)
- On request CR-Ni plated, PTFE coated done
- On request Atex (exproof) coil.

## TECHNICAL FEATURES
Max. Viscosity : 5°E (~37cST veya $mm^2/s$)
Response Time : Opening time : 400 ms
Closing Time : 1000 ms

## SEALS FEATURES
NBR : -20°C...+80°C
EPDM : -30°C...+130°C
VİTON : -20°C...+160°C
PTFE : -10°C...+160°C
RUBY : -10°C...+160°C

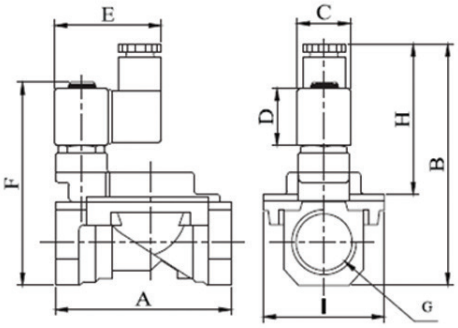


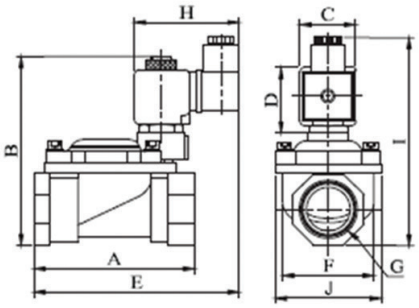


| Dimensions (mm) | | | | | | | | |
|---|---|---|---|---|---|---|---|---|
| G | A | B | C | D | E | F | I | H |
| 3/8" | 58 | 98 | 20.9 | 29 | 60 | 83 | 43 | 64.1 |
| 1/2" | 58 | 98 | 20.9 | 29 | 60 | 83 | 43 | 64.1 |
| 3/4" | 63 | 105 | 20.9 | 29 | 60 | 83 | 43 | 64.1 |

| Solenoid Vave Symbol | Valve Type/ Order No | Connection Size | Orifice Size | Pressure min/max | | Kv | Seal | | | Weight |
|---|---|---|---|---|---|---|---|---|---|---|
| | | | | | | | | Option | | |
| | S1060 | G | mm | Bar | Bar | l/min | NBR | Viton | EPDM | kg |
| 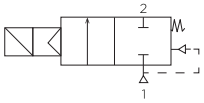 | S1060.02.120 | 3/8" | 12 | 0.35 | 12 | 48 | ✓ | ✓ | ✓ | 0,68 |
| | S1060.03.120 | 1/2" | 12 | 0.35 | 12 | 48 | ✓ | ✓ | ✓ | 0,71 |
| | S1060.04.120 | 3/4" | 15 | 0.35 | 12 | 70 | ✓ | ✓ | ✓ | 0,8 |



**STANDARDS**
- Standard tube connection G (BSP) (ISO 228-1) and other tube connections (NPT (ANSI 1.20.3)) are available on request.
- TORK solenoid valves 97/23/EC, are available for pressure equipment directive (PED) and 2006/95/ECC low voltage directive (LVD).

**Not:** Please look catalogues for more details

TSS1060EN231026