Stainless Steel Solenoid Valve
SS1030 Series (G3/8", G1/2", G3/4", G1", G11/4", G11/2", G2")

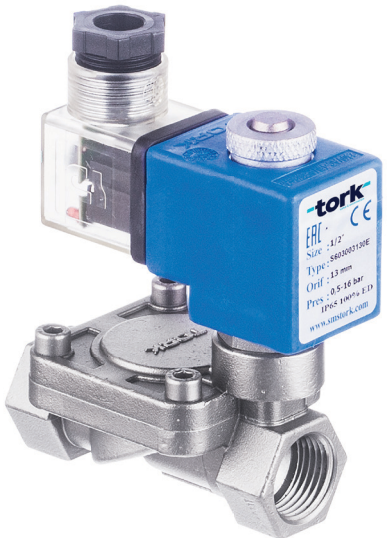

NORMALLY CLOSED
2/2 WAY
PILOT OPERATED
ΔP=0,5

WATER AIR GAS

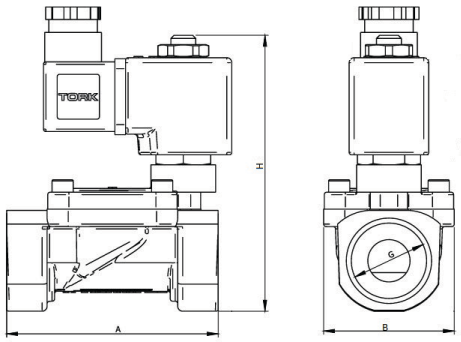

Ölçüler (mm)			
G	A	B	H
3/8"	79	52	98
1/2"	79	52	98
3/4"	75	58	118
1"	90	61	123
11/4"	110	83	146
11/2"	129	95	146
2"	150	110	157

Coils	Nominal Values	Cold/ Hot	Inrush	Holding	Current (A)	Surface Temperature (°C)
C40012VDC18W	12VDC 18W	COLD	19,56	19,56	1,63	20
		HOT	14,52	14,52	1,21	106
C40024VDC18W	24VDC 18W	COLD	20,88	20,88	0,87	25
		HOT	14,64	14,64	0,61	116
C40110VDC18W	110VDC 18W	COLD	19,96	19,96	0,18	23
		HOT	13,56	13,56	0,123	115
C40012VAC15VA	12VAC 15VA	COLD	23,81	16,43	1,3	25
		HOT	-	15,86	1,262	79
C40024VAC15VA	24VAC 15VA	COLD	25,82	15,02	0,62	22
		HOT	-	13,91	0,57	81
C40110VAC15VA	110VAC 15VA	COLD	30,65	15,17	0,137	24
		HOT	-	13,96	0,126	80
C40230VAC15VA	230VAC 15VA	COLD	31,4	15,64	0,068	25
		HOT	-	14,41	0,063	80
C40230VAC24VA	230VAC 24VA	COLD	45,1	23,92	0,0154	23
		HOT	-	21,62	0,0154	100

Solenoid Vave Symbol	Valve Type/ Order No	Connection Size	Orifice Size	Pressure min/max		Kv	Seal			Weight
								Opsiyon		
	SS1030	G	mm	Bar	Bar	l/min	NBR	Viton	EPDM	kg
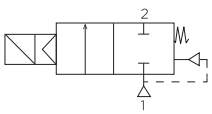	SS1030.02	3/8"	12.5	0,5	16	48	✓	✓	✓	1,08
	SS1030.03	1/2"	12.5	0,5	16	48	✓	✓	✓	1,04
	SS1030.04	3/4"	20	0,5	16	108	✓	✓	✓	1,06
	SS1030.05	1"	25	0,5	16	172	✓	✓	✓	1,20
	SS1030.06	11/4"	30	0,5	12	315	✓	✓	✓	3,45
	SS1030.07	11/2"	39	0,5	12	430	✓	✓	✓	3,35
	SS1030.08	2"	46	0,5	12	690	✓	✓	✓	3,78

STANDARDS

- Standard tube connection G (BSP) (ISO 228-1) and other tube connections (NPT (ANSI 1.20.3)) are available on request.
- TORK solenoid valves 97/23/EC, are available for pressure equipment directive (PED) and 2006/95/ECC low voltage directive (LVD).

Not: Please look catalogues for more details

TSS1030EN261007