HOSE CONNECTABLE NORMALLY CLOSED SOLENOID VALVE S8710 Series (5/8")



NORMALLY CLOSED
2 WAY
PILOT OPERATED
ΔP=0,15

WATER

GENERAL FEATURES

- Solenoid valves are used with filter.
- Solenoid valves can be mounted in any position without affecting its its operation.
- Coil to be used in vertical position.

ELECTRICAL CHARACTERISTICS

Continuous Duty	: ED %100
Coil Insulation Class	: H (180°C)(IEC 85) B
Coil Impregnation	: Polyester Fiber Glass
Coil Outer Body Material	: Fiber Glass Reinforced
Ambient Temperature	: -20°C, +60°C
Protection Degree	: IP65 (on request IP68)
Electric Plug Connection	: DIN 46340 3- Poles Connector(DIN43650)
Terminal	: Cable Ø6-8 mm
Electrical Safety	: IEC 335
Standard Voltages	: AC 12V 15VA, 24V 15VA, 48V 15VA, 110V 15VA, 230V 15 VA, 230V 24VA DC 12V 18W, 18V 18W, 24V 18W, 48V 18W, 110V 18W

On request other voltages

Voltages Tolerance	: AC -15%, +10%, DC -5%; + 10%
Frequency	: 50 Hz (60 Hz...)

On request; Connector with LED, PWM Socket
Specify coil voltage with order

MATERIALS IN CONTACT WITH FLUID

Body	: Brass
Internal Parts	: Stainless Steel
Sealing	: EPDM (on request NBR and FKM)

TECHNICAL FEATURES

Max. Viscosity	: 5°E (~37cST or mm2/s)
Response Time	: Opening Time: 400-1600 ms Closing Time : 1000-2000 ms

SEALS FEATURES

NBR	: -20°C...+80°C
EPDM	: -30°C...+130°C
VITON	: -20°C...+160°C

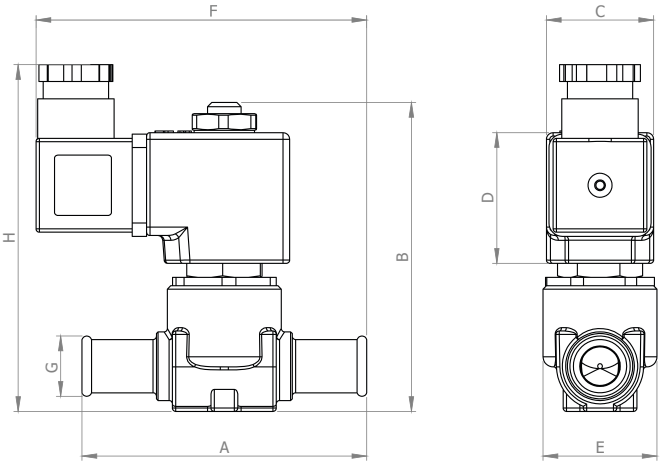

Dimensions (mm)							
G	A	B	C	D	E	F	H
5/8"	85	92,20	32	39	34	98,70	103,50

Coils	Nominal Values	Cold/ Hot	Inrush	Holding	Current (A)	Surface Temperature (°C)
C40012VDC18W	12VDC 18W	COLD	19,56	19,56	1,63	20
		HOT	14,52	14,52	1,21	106
C40024VDC18W	24VDC 18W	COLD	20,88	20,88	0,87	25
		HOT	14,64	14,64	0,61	116
C40110VDC18W	110VDC 18W	COLD	19,96	19,96	0,18	23
		HOT	13,56	13,56	0,123	115
C40012VAC15VA	12VAC 15VA	COLD	23,81	16,43	1,3	25
		HOT	-	15,86	1,262	79
C40024VAC15VA	24VAC 15VA	COLD	25,82	15,02	0,62	22
		HOT	-	13,91	0,57	81
C40110VAC15VA	110VAC 15VA	COLD	30,65	15,17	0,137	24
		HOT	-	13,96	0,126	80
C40230VAC15VA	230VAC 15VA	COLD	31,4	15,64	0,068	25
		HOT	-	14,41	0,063	80
C40230VAC24VA	230VAC 24VA	COLD	45,1	23,92	0,0154	23
		HOT	-	21,62	0,0154	100

Solenoid Vave Symbol	Valve Type/ Order No	Connection Size	Orifice Size	Pressure min/max		Kv	Seal			Weight
								Opsiyon		
	S8710	inch	mm	Bar	Bar	l/min	EPDM	NBR	FKM	kg
	S8710.15.110E	5/8" ODF	11	0,15	3	36	✓	✓	✓	0,50

TS8710EN260420