S8610 / S8680 Series Vessel Horn Normaly Closed G 1/2” Threaded 2/2 Way Direct Operated Solenoid Valves

NORMALLY CLOSED

2 WAY

GENERAL FEATURES

- TORK serie S8610 / S8680 vessel horn solenoid valves are 2/2 way normally closed and direct acting.
- New designed product.
- Suitable for non-aggressive liquids (water, light oil (2E) ete ...), gaseous fluids (air, inert gases ete ...).
- Working Temperature:-20'C / +80'C for S8610 and -20'C / +160'C for S8680
- Not suitable far use with dangerous fluids listed in Group 1.
- Minimum operating differential pressure 0,5 and 1 bar.
- High reliability, quality and performance; long life, corrosion resistance.
- Wide pressure ratings, range of flow rate and orifice options.
- TORK solenoid valves satisfy relevant 97 /23/EC, Pressure Equipment Directive (PED) and 2006/95/EEC Low Voltage Directive (LVD)
- Coils interchangeable.
- Flow factor Kv of each valve is indicated, so that the flow Q can be calculated as a function of pressure.
- Solenoid valves must be used with filtered fluids.
- Solenoid valve can be mounted in any position without affecting operation; vertical with coil upwards preferred.
- Standard pipe connection is G (BSP) (ISO 228-1) and other pipe connections are available on request.

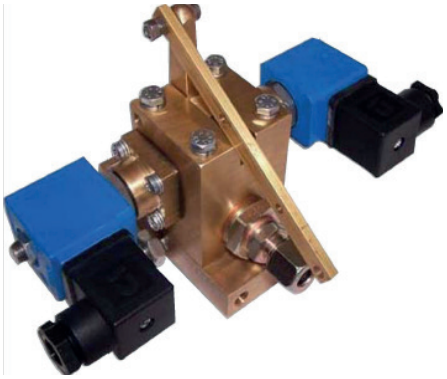

ELECTRICAL CHARACTERISTICS

Continuous Duty	: ED %100
Coil Insulation Class	: H (180°C)(IEC 85) B
Coil Impregnation	: Polyester Fiber Glass
Coil Outer Body Material	: Fiber Glass Reinfarced
Ambient Temperature	: -20°C, +60°C
Protection Degree	: IP65, on request IP68
Electric Plug Connection	: DiN 46340 3-poles connectors (DiN 43650) Terminal (Cable Ø6-8 mm)
Elecrical Safety	: IEC 335
Standard Voltages	: AC 230V 15VA, DC 24V 18W
Voltage Tolerance	: For AC -15%; + 10%, For DC -5%; + 10%
Frequency	: 50 Hz, other frequencies on request; (60 Hz)

On request; connector with LED

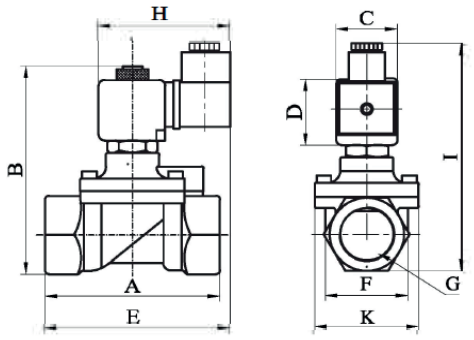

MATERIALS IN CONTACT WITH FLUID

Body	: Brass
Internal parts	: Stainless Steel
Sealing	: NBR (for S8610) , PTFE + VITON (for S8680)

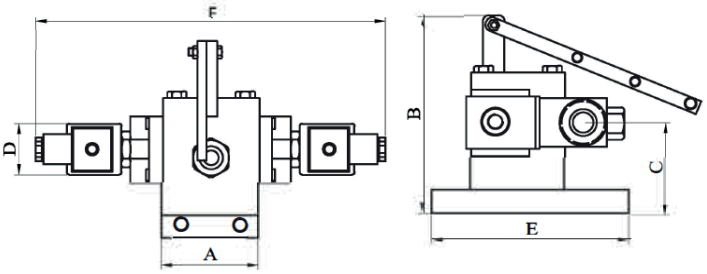

TECHNICAL FEATURES

Max Viscosity	: 5'E (-37cSt or mm2/s)
Response Time	: Opening Time 400 ms to 1600 ms, Closing Time 1000 ms to 2000 ms

Maximum Allowable Pressure: 30 bar for S8610 and 40 bar for S8680

Fluid Temperature	: for NBR -20"C to +80"C and for PTFE + VITON from -20°C to +160°C

Dimensions (mm)

G	A	B	C	D	E	F
1/2"	50	123	25,5	32	45	92

Dimensions (mm)

G	A	B	C	D	E	F	J	H	I
1/2"	79	100	32	45	92	39,5	52	76	110

Solenoid Valve Symbol	"Valf Type / Order No"	"Connection Size"	Orifice Size	Pressure		Kv	"Fluid Temperature"		Seal
				min	max				
	S8610	DN	mm	Bar	Bar	Lt/ min	°C		min
							min	max	
	S8610.03.100	1/2"	10	1	30	25	-20	80	NBR
	S8680.03.145		14,5	0,5	40	70	-20	160	PTFE + VITON

Not: Please look catalogues for more details.

STANDARDS

- Standard tube connection G (BSP) (ISO 228-1) and other tube connections (NPT (ANSI 1.20.3)) are available on request.
- TORK solenoid valves 97/23/EC, are available for pressure equipment directive (PED) and 2006/95/ECC low voltage directive (LVD).

TS8610EN260925