Steam Solenoid Valves
S2010 Series (G1/8", G1/4")

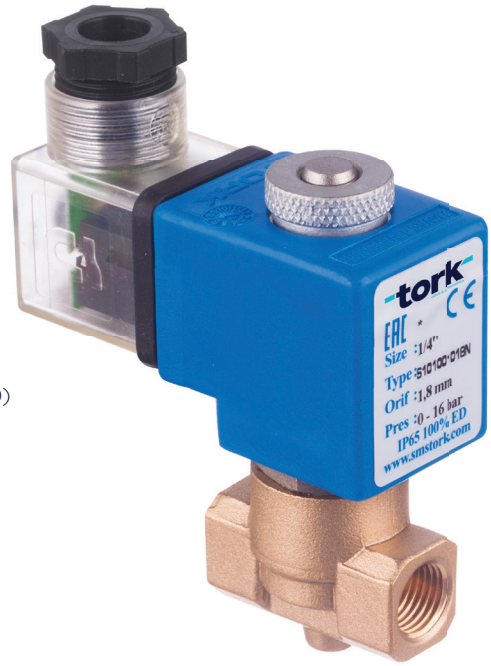

NORMALLY CLOSED
2/2 OPERATED
DIRECT ACTING
ΔP=0

STEAM

GENERAL FEATURES
- Wide pressure range, flow rate and orifis options.
- Solenoid valves are used with filters.
- Solenoid valves can be mounted in any position without affecting its operation.
- Coil to be used in a vertical position.

ELECTRICAL CHARACTERISTICS
Continuous Duty : ED %100
Coil Insulation Class : H (180°C)(IEC 85)
Coil Impregnation : Polyester Fiber Glass
Ambient Temperature : -20°C, +60°C
Protection Degree : IP65 (ISO 60529) On request; IP68
Electric Plug Connection : DIN 46340 3-Poles Connector (DIN 43650)
Connector Specification : ISO 4400 / EN 175301-803 Form A, Spade Plug (Cable Ø6-8 mm)
Electrical Safety : IEC 335
Standard Voltages : AC 12V 15VA, 24V 15VA, 48V 15VA, 110V 15VA, 230V 15VA, 230V 24VA DC 12V 18W, 24V 18W, 48V 18W, 110V 18W
On request other voltages
Voltages Tolerance : AC -15%, +10% DC -5%, +10%
Frequency : 50 Hz (60 Hz...)
On request; Connector with LED, PWM Socket Specify coil voltage with order

MATERIALS IN CONTACT WITH FLUID
Body : Brass
Internal Parts : Stainless Steel
Sealing : On request; EPDM, TEFLON
Shading Ring : Copper (EN 12735-1)
Seats, Core Tube, Springs : Stainless Steel

OPTIONS
Female connection: BSP; (On request NPT)
- On request CR-Ni plated, PTFE coated done
- On request Atex (exproof) coil.

TECHNICAL FEATURES
Max. Viscosity : 5°E (~37cST or mm^2/s)
Response Time : Opening time : 30 ms
Closing Time : 30 ms

SEALS FEATURES
NBR : -20°C...+80°C
EPDM : -30°C...+130°C
VİTON : -20°C...+160°C
PTFE : -10°C...+160°C
RUBY : -10°C...+160°C

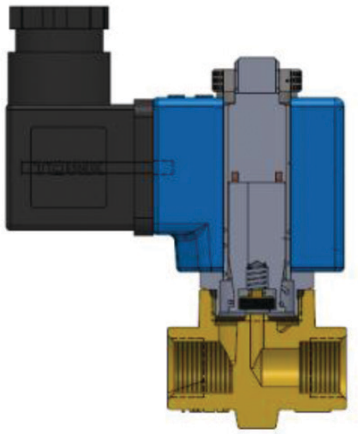

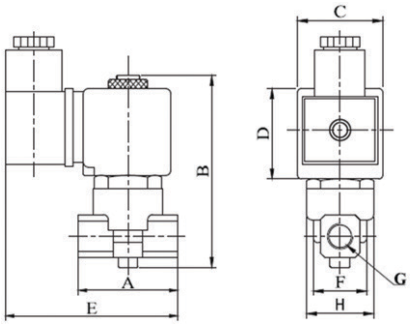

Dimensions (mm)							
G	A	B	C	D	E	F	H
1/8"	40	90	32	39	78	22.3	25.6
1/4"	40	90	32	39	78	22.3	25.6

Coils	Nominal Values	Cold/ Hot	Inrush	Holding	Current (A)	Surface Temperature (°C)
C40012VDC18W	12VDC 18W	COLD	19,56	19,56	1,63	20
		HOT	14,52	14,52	1,21	106
C40024VDC18W	24VDC 18W	COLD	20,88	20,88	0,87	25
		HOT	14,64	14,64	0,61	116
C40110VDC18W	110VDC 18W	COLD	19,96	19,96	0,18	23
		HOT	13,56	13,56	0,123	115
C40012VAC15VA	12VAC 15VA	COLD	23,81	16,43	1,3	25
		HOT	-	15,86	1,262	79
C40024VAC15VA	24VAC 15VA	COLD	25,82	15,02	0,62	22
		HOT	-	13,91	0,57	81
C40110VAC15VA	110VAC 15VA	COLD	30,65	15,17	0,137	24
		HOT	-	13,96	0,126	80
C40230VAC15VA	230VAC 15VA	COLD	31,4	15,64	0,068	25
		HOT	-	14,41	0,063	80
C40230VAC24VA	230VAC 24VA	COLD	45,1	23,92	0,0154	23
		HOT	-	21,62	0,0154	100

Solenoid Vave Symbol	Valve Type/ Order No	Connection Size	Orifice Size	Pressure min/max		Kv	Seal		Weight
	S2010	G	mm	Bar	Bar	l/min	TEFLON	EPDM	kg
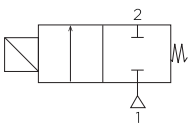	S2010.00.018	1/8"	1.8	0	5	1.6	✓	✓	0,36
	S2010.00.025	1/8"	2.5	0	5	3.2	✓	✓	0,36
	S2010.00.030	1/8"	3	0	5	4.6	✓	✓	0,36
	S2010.01.018	1/4"	1.8	0	5	1.6	✓	✓	0,35
	S2010.01.025	1/4"	2.5	0	5	3.2	✓	✓	0,35
	S2010.01.030	1/4"	3	0	5	4.6	✓	✓	0,35

STANDARDS
- Standard tube connection G (BSP) (ISO 228-1) and other tube connections (NPT (ANSI 1.20.3)) are available on request.
- TORK solenoid valves 97/23/EC, are available for pressure equipment directive (PED) and 2006/95/ECC low voltage directive (LVD).

Not: Please look catalogues for more details

Steam Solenoid Valves
S2010 Series (G3/8", G1/2", G3/4", G1", G11/4", G11/2", G2")

GENERAL FEATURES
- Wide pressure range, flow rate and orifis options.
- Solenoid valves are used with filters.
- Solenoid valves can be mounted in any position without affecting its operation.
- Coil to be used in a vertical position.



NORMALLY CLOSED
2/2 OPERATED
PILOT OPERATED
ΔP=0,5

STEAM

ELECTRICAL CHARACTERISTICS
Continuous Duty : ED %100
Coil Insulation Class : H (180°C)(IEC 85)
Coil Impregnation : Polyester Fiber Glass
Ambient Temperature : -20°C, +60°C
Protection Degree : IP65 (ISO 60529) On request; IP68
Electric Plug Connection : DIN 46340 3-Poles Connector (DIN 43650)
Connector Specification : ISO 4400 / EN 175301-803 Form A, Spade Plug (Cable Ø6-8 mm)
Electrical Safety : IEC 335
Standard Voltages : AC 12V 15VA, 24V 15VA, 48V 15VA, 110V 15VA, 230V 15VA, 230V 24VA DC 12V 18W, 24V 18W, 48V 18W, 110V 18W
On request other voltages
Voltages Tolerance : AC -15%, +10% DC -5%, +10%
Frequency : 50 Hz (60 Hz...)
On request; Connector with LED, PWM Socket Specify coil voltage with order

MATERIALS IN CONTACT WITH FLUID
Body : Brass
Internal Parts : Stainless Steel, Brass
Sealing : Teflon (3/8"-1"), EPDM (11/4"-2")
Shading Ring : Copper (EN 12735-1)
Seats, Core Tube, Springs : Stainless Steel, Brass

OPTIONS
Female connection: BSP; (On request NPT)
- On request CR-Ni plated, PTFE coated done
- On request Atex (exproof) coil.

TECHNICAL FEATURES
Max. Viscosity : 5°E (~37cST or mm^2/s)
Response Time : Opening time : 400 ms
Closing Time : 1000 ms

SEALS FEATURES
NBR : -20°C...+80°C
EPDM : -30°C...+130°C
VİTON : -20°C...+160°C
PTFE : -10°C...+160°C
RUBY : -10°C...+160°C

Dimensions (mm)									
G	A	B	C	D	E	F	K	H	I
3/8"	75	97	32	45	91.3	37.5	52	76	108
1/2"	79	100	32	45	92	39.5	52	76	110
3/4"	85	107.5	32	45	94	41.5	52	76	118
1"	87.9	115	32	45	101	42.5	52	76	124
11/4"	141	143	32	45	76	96.5	110.7	156	-
11/2"	139	143	32	45	76	96.5	110.7	156	-
2	145.6	153	32	45	76	96.5	110.7	165.5	-

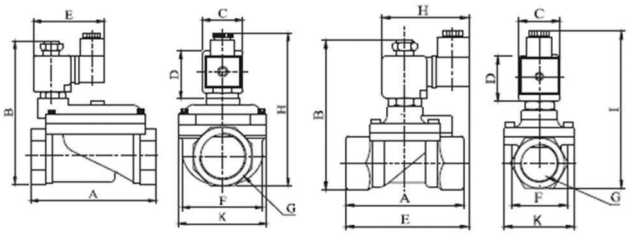

Coils	Nominal Values	Cold/ Hot	Inrush	Holding	Current (A)	Surface Temperature (°C)
C40012VDC18W	12VDC 18W	COLD	19,56	19,56	1,63	20
		HOT	14,52	14,52	1,21	106
C40024VDC18W	24VDC 18W	COLD	20,88	20,88	0,87	25
		HOT	14,64	14,64	0,61	116
C40110VDC18W	110VDC 18W	COLD	19,96	19,96	0,18	23
		HOT	13,56	13,56	0,123	115
C40012VAC15VA	12VAC 15VA	COLD	23,81	16,43	1,3	25
		HOT	-	15,86	1,262	79
C40024VAC15VA	24VAC 15VA	COLD	25,82	15,02	0,62	22
		HOT	-	13,91	0,57	81
C40110VAC15VA	110VAC 15VA	COLD	30,65	15,17	0,137	24
		HOT	-	13,96	0,126	80
C40230VAC15VA	230VAC 15VA	COLD	31,4	15,64	0,068	25
		HOT	-	14,41	0,063	80
C40230VAC24VA	230VAC 24VA	COLD	45,1	23,92	0,0154	23
		HOT	-	21,62	0,0154	100

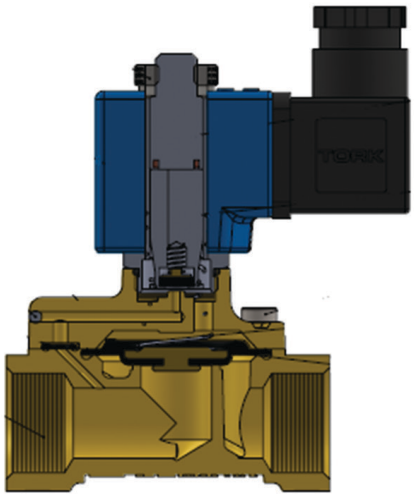

Solenoid Vave Symbol	Valve Type/ Order No	Connection Size	Orifice Size	Pressure min/max		Kv	Seal		Weight
	S2010	G	mm	Bar	Bar	l/min	TEFLON	EPDM	kg
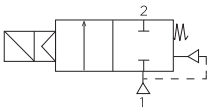	S2010.02	3/8"	12.5	0.5	5	48	✓		0,68
	S2010.03	1/2"	14.5	0.5	5	70	✓		0,72
	S2010.04	3/4"	17	0.5	5	90	✓		0,81
	S2010.05	1"	17	0.5	5	90	✓		0,98
	S2010.06	11/4"	30	0.5	3	250		✓	2.65
	S2010.07	11/2"	39	0.5	3	370		✓	2.55
	S2010.08	2	46	0.5	3	450		✓	2.98

Not: Please look catalogues for more details

STANDARDS
- Standard tube connection G (BSP) (ISO 228-1) and other tube connections (NPT (ANSI 1.20.3)) are available on request.
- TORK solenoid valves 97/23/EC, are available for pressure equipment directive (PED) and 2006/95/ECC low voltage directive (LVD).

TS2010EN-260729

Steam Solenoid Valves
S2011 Series (G1/8", G1/4")

GENERAL FEATURES
- Wide pressure range, flow rate and orifis options.
- Solenoid valves are used with filters.
- Solenoid valves can be mounted in any position without affecting its operation.
- Coil to be used in a vertical position.

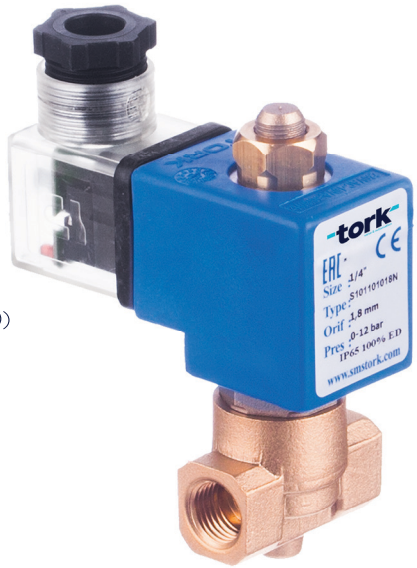

NORMALLY OPEN
2/2 OPERATED
DIRECT ACTING
ΔP=0

STEAM

ELECTRICAL CHARACTERISTICS
Continuous Duty : ED %100
Coil Insulation Class : H (180°C)(IEC 85)
Coil Impregnation : Polyester Fiber Glass
Ambient Temperature : -20°C, +60°C
Protection Degree : IP65 (ISO 60529) On request; IP68
Electric Plug Connection : DIN 46340 3-Poles Connector (DIN 43650)
Connector Specification : ISO 4400 / EN 175301-803 Form A, Spade Plug (Cable Ø6-8 mm)
Electrical Safety : IEC 335
Standard Voltages : AC 12V 15VA, 24V 15VA, 48V 15VA, 110V 15VA, 230V 15VA, 230V 24VA DC 12V 18W, 24V 18W, 48V 18W, 110V 18W
On request other voltages
Voltages Tolerance : AC -15%, +10% DC -5%, +10%
Frequency : 50 Hz (60 Hz...)
On request; Connector with LED, PWM Socket Specify coil voltage with order

MATERIALS IN CONTACT WITH FLUID
Body : Brass
Internal Parts : Stainless Steel, Brass
Sealing : EPDM
Shading Ring : Copper (EN 12735-1)
Seats, Core Tube, Springs : Stainless Steel, Brass

OPTIONS
Female connection: BSP; (On request NPT)
- On request CR-Ni plated, PTFE coated done
- On request Atex (exproof) coil.

TECHNICAL FEATURES
Max. Viscosity : 5°E (~37cST veya mm²/s)
Response Time : Opening time : 30 ms
Closing Time : 30 ms

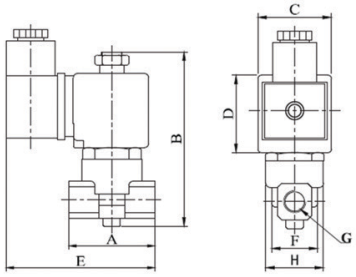

Dimensions (mm)							
G	A	B	C	D	E	F	H
1/8"	40	90	32	39	78	22.3	25.6
1/4"	40	90	32	39	78	22.3	25.6

Coils	Nominal Values	Cold/ Hot	Inrush	Holding	Current (A)	Surface Temperature (°C)
C40012VDC18W	12VDC 18W	COLD	19,56	19,56	1,63	20
		HOT	14,52	14,52	1,21	106
C40024VDC18W	24VDC 18W	COLD	20,88	20,88	0,87	25
		HOT	14,64	14,64	0,61	116
C40110VDC18W	110VDC 18W	COLD	19,96	19,96	0,18	23
		HOT	13,56	13,56	0,123	115
C40012VAC15VA	12VAC 15VA	COLD	23,81	16,43	1,3	25
		HOT	-	15,86	1,262	79
C40024VAC15VA	24VAC 15VA	COLD	25,82	15,02	0,62	22
		HOT	-	13,91	0,57	81
C40110VAC15VA	110VAC 15VA	COLD	30,65	15,17	0,137	24
		HOT	-	13,96	0,126	80
C40230VAC15VA	230VAC 15VA	COLD	31,4	15,64	0,068	25
		HOT	-	14,41	0,063	80
C40230VAC24VA	230VAC 24VA	COLD	45,1	23,92	0,0154	23
		HOT	-	21,62	0,0154	100

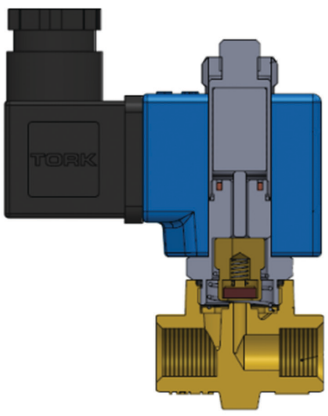

Solenoid Vave Symbol	Valve Type/ Order No	Connection Size	Orifice Size	Pressure min/max		Kv	Seal	Weight	Temperature
	S2011	G	mm	Bar	Bar	l/min	EPDM	kg	°C
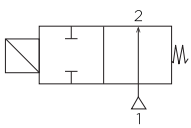	S2011.00.018	1/8"	1.8	0	5	1.6	✓	0,38	160
	S2011.00.025	1/8"	2.5	0	5	3.2	✓	0,38	160
	S2011.00.030	1/8"	3	0	5	4.6	✓	0,38	160
	S2011.01.018	1/4"	1.8	0	5	1.6	✓	0,37	160
	S2011.01.025	1/4"	2.5	0	5	3.2	✓	0,37	160
	S2011.01.030	1/4"	3	0	5	4.6	✓	0,37	160

STANDARDS
- Standard tube connection G (BSP) (ISO 228-1) and other tube connections (NPT (ANSI 1.20.3)) are available on request.
- TORK solenoid valves 97/23/EC, are available for pressure equipment directive (PED) and 2006/95/ECC low voltage directive (LVD).

Not: Please look catalogues for more details

Steam Solenoid Valves
S2011 Series (G3/8", G1/2", G3/4", G1", G11/4", G11/2", G2")

GENERAL FEATURES
- Wide pressure range, flow rate and orifis options.
- Solenoid valves are used with filters.
- Solenoid valves can be mounted in any position without affecting its operation.
- Coil to be used in a vertical position.

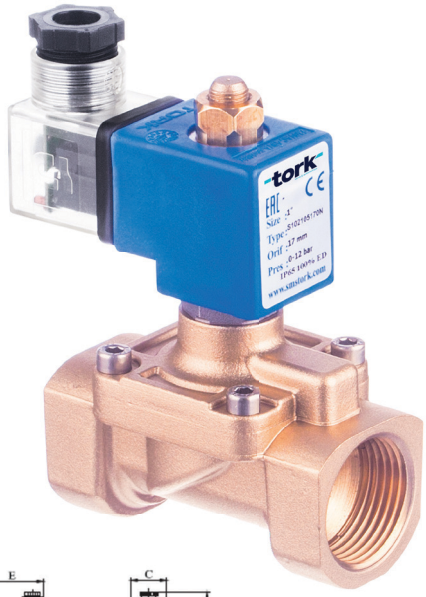

NORMALLY OPEN
2/2 OPERATED
PILOT OPERATED
ΔP=0,5

STEAM

ELECTRICAL CHARACTERISTICS
Continuous Duty : ED %100
Coil Insulation Class : H (180°C)(IEC 85)
Coil Impregnation : Polyester Fiber Glass
Ambient Temperature : -20°C, +60°C
Protection Degree : IP65 (ISO 60529) On request; IP68
Electric Plug Connection : DIN 46340 3-Poles Connector (DIN 43650)
Connector Specification : ISO 4400 / EN 175301-803 Form A, Spade Plug (Cable Ø6-8 mm)
Electrical Safety : IEC 335
Standard Voltages : AC 12V 15VA, 24V 15VA, 48V 15VA, 110V 15VA, 230V 15VA, 230V 24VA DC 12V 18W, 24V 18W, 48V 18W, 110V 18W
On request other voltages
Voltages Tolerance : AC -15%, +10% DC -5%, +10%
Frequency : 50 Hz (60 Hz...)
On request; Connector with LED, PWM Socket Specify coil voltage with order

MATERIALS IN CONTACT WITH FLUID
Body : Brass
Internal Parts : Stainless Steel, Brass
Sealing : PTFE (On request; EPDM) (Please see the Seal Options at below table)
Shading Ring : Copper (EN 12735-1)
Seats, Core Tube, Springs: Stainless Steel, Brass

OPTIONS
Female connection: BSP; (On request NPT)
- On request CR-Ni plated, PTFE coated done
- On request Atex (exproof) coil.

TECHNICAL FEATURES
Max. Viscosity : 5°E (~37cST veya mm²/s)
Response Time : Opening time : 30 ms
Closing Time : 30 ms

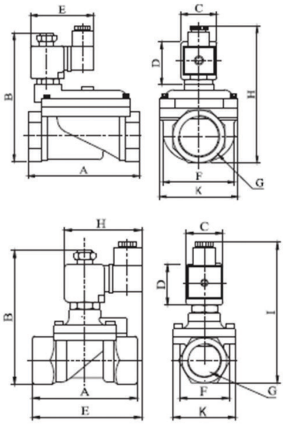

Dimensions (mm)									
G	A	B	C	D	E	F	K	H	I
3/8"	75	97	32	45	91.3	37.5	52	76	108
1/2"	79	100	32	45	92	39.5	52	76	110
3/4"	85	107.5	32	45	94	41.5	52	76	118
1"	87.9	115	32	45	101	42.5	52	76	124
11/4"	141	143	32	45	76	96.5	110.7	156	-
11/2"	139	143	32	45	76	96.5	110.7	156	-
2	145.6	153	32	45	76	96.5	110.7	165.5	-

Coils	Nominal Values	Cold/ Hot	Inrush	Holding	Current (A)	Surface Temperature (°C)
C40012VDC18W	12VDC 18W	COLD	19,56	19,56	1,63	20
		HOT	14,52	14,52	1,21	106
C40024VDC18W	24VDC 18W	COLD	20,88	20,88	0,87	25
		HOT	14,64	14,64	0,61	116
C40110VDC18W	110VDC 18W	COLD	19,96	19,96	0,18	23
		HOT	13,56	13,56	0,123	115
C40012VAC15VA	12VAC 15VA	COLD	23,81	16,43	1,3	25
		HOT	-	15,86	1,262	79
C40024VAC15VA	24VAC 15VA	COLD	25,82	15,02	0,62	22
		HOT	-	13,91	0,57	81
C40110VAC15VA	110VAC 15VA	COLD	30,65	15,17	0,137	24
		HOT	-	13,96	0,126	80
C40230VAC15VA	230VAC 15VA	COLD	31,4	15,64	0,068	25
		HOT	-	14,41	0,063	80
C40230VAC24VA	230VAC 24VA	COLD	45,1	23,92	0,0154	23
		HOT	-	21,62	0,0154	100

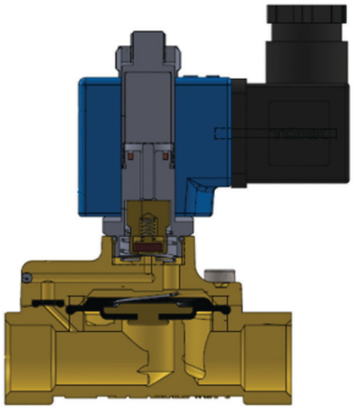

Solenoid Vave Symbol	Valve Type/ Order No	Connection Size	Orifice Size	Pressure min/max		Kv	Seal		Weight	Temperature
								Opsiyon		
	S2011	G	mm	Bar	Bar	l/min	TEFLON	EPDM	kg	°C
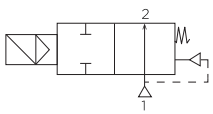	S2011.02	3/8"	12.5	0.5	5	48	✓		0,69	140
	S2011.03	1/2"	14.5	0.5	5	70	✓		0,72	140
	S2011.04	3/4"	17	0.5	5	90	✓		0,81	140
	S2011.05	1"	17	0.5	5	90	✓		0,98	140
	S2011.06	11/4"	30	0.5	3	250		✓	2.66	140
	S2011.07	11/2"	39	0.5	3	370		✓	2.56	140
	S2011.08	2	46	0.5	3	450		✓	2.99	140

STANDARDS
- Standard tube connection G (BSP) (ISO 228-1) and other tube connections (NPT (ANSI 1.20.3)) are available on request.
- TORK solenoid valves 97/23/EC, are available for pressure equipment directive (PED) and 2006/95/ECC low voltage directive (LVD).

Not: Please look catalogues for more details