Drinking Water Solenoid Valve S1510 Series (G1/8", G1/4")

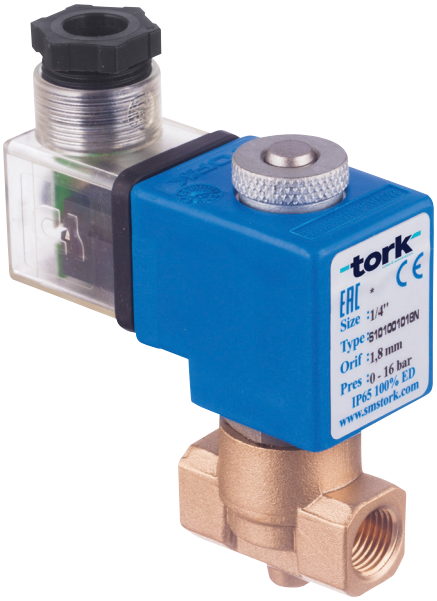

NORMALLY CLOSED
2 WAY
DIRECT ACTING
ΔP=0

WATER

GENERAL FEATURES

- Wide pressure range, a flow rate and orifice options.
- Appropriately designed solenoid valve to NSF.
- Solenoid valves are used with the filter.
- Solenoid valves can be mounted in any position without affecting its operation.
- Coil to be used in a vertical position.

ELECTRICAL CHARACTERISTICS

Continuous Duty : ED %100
Coil Insulation Class : H (180°C)(IEC 85)
Coil Impregnation : Polyester Fiber Glass
Ambient Temperature : -20°C, +60°C
Protection Degree : IP65 (ISO 60529) On request; IP68
Electric Plug Connection : DIN 46340 3- Poles Connector (DIN43650)
Connector Specification : ISO 4400 / EN 175301-803 Form A, Spade Plug (Cable Ø6-8 mm)
Electrical Safety : IEC 335
Standard Voltages : AC 12V 15VA, 24V 15VA, 48V, 15VA, 110V 15VA, 230V 15VA, 230V 24VA
DC 12V 18W, 24V 18W, 48V,18W, 110V 18W
On request other voltages
Voltages Tolerance : AC -15%, +10% DC -5%, +10%
Frequency : 50 Hz (60 Hz...)
On request; Connector with LED, PWM Socket Specify coil voltage with order

MATERIALS IN CONTACT WITH FLUID

Body : Appropriate brass for NSF
Internal Parts : Stainless Steel
Sealing : Aprropriate rubber for NSF
Shading Ring : Copper (EN 12735-1)
Seats, Core Tube, Springs : Stainless Steel

OPTIONS

Female connection: BSP; (On request NPT)
- On request Atex (exproof) coil.

TECHNICAL FEATURES

Max. Viscosity : 5°E (~37cST veya mm²/s)
Response Time : Opening time : 30 ms
Closing Time : 30 ms

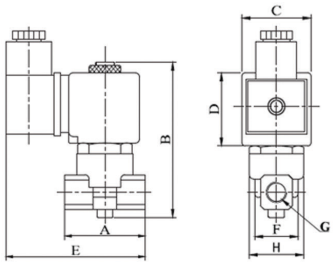

Dimensions (mm)							
G	A	B	C	D	E	F	H
1/8"	40	83	32	39	78	22.3	25.6
1/4"	40	83	32	39	78	22.3	25.6

Coils	Nominal Values	Cold/ Hot	Inrush	Holding	Current (A)	Surface Temperature (°C)
C40012VDC18W	12VDC 18W	COLD	19,56	19,56	1,63	20
		HOT	14,52	14,52	1,21	106
C40024VDC18W	24VDC 18W	COLD	20,88	20,88	0,87	25
		HOT	14,64	14,64	0,61	116
C40110VDC18W	110VDC 18W	COLD	19,96	19,96	0,18	23
		HOT	13,56	13,56	0,123	115
C40012VAC15VA	12VAC 15VA	COLD	23,81	16,43	1,3	25
		HOT	-	15,86	1,262	79
C40024VAC15VA	24VAC 15VA	COLD	25,82	15,02	0,62	22
		HOT	-	13,91	0,57	81
C40110VAC15VA	110VAC 15VA	COLD	30,65	15,17	0,137	24
		HOT	-	13,96	0,126	80
C40230VAC15VA	230VAC 15VA	HOT	31,4	15,64	0,068	25
		HOT	-	14,41	0,063	80
C40230VAC24VA	230VAC 24VA	COLD	45,1	23,92	0,0154	23
		HOT	-	21,62	0,0154	100

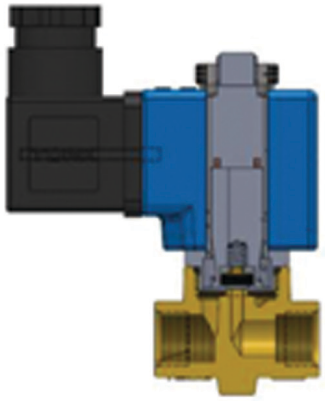

Solenoid Vave Symbol	Valve Type/ Order No	Connection Size	Orifice Size	Pressure min/max		Kv	Seal	Weight
	S1510	G	mm	Bar	Bar	l/min	Appropriate rubber for NSF	kg
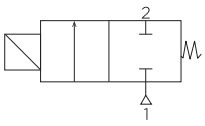 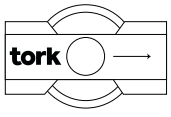 Valve Body Bottom View	S1510.00.018	1/8"	1.8	0	16	1.6	✓	0,36
	S1510.00.025	1/8"	2.5	0	12	3.2	✓	0,36
	S1510.00.030	1/8"	3	0	10	4.6	✓	0,36
	S1510.00.040	1/8"	4	0	9	6.4	✓	0,36
	S1510.00.050	1/8"	5	0	7	9.2	✓	0,36
	S1510.00.060	1/8"	6	0	5	11	✓	0,36
	S1510.01.018	1/4"	1.8	0	16	1.6	✓	0,35
	S1510.01.025	1/4"	2.5	0	12	3.2	✓	0,35
	S1510.01.030	1/4"	3	0	10	4.6	✓	0,35
	S1510.01.040	1/4"	4	0	9	6.4	✓	0,35
	S1510.01.050	1/4"	5	0	7	9.2	✓	0,35
	S1510.01.060	1/4"	6	0	5	11	✓	0,35

Not: Please look catalogues for more details

STANDARDS

- Standard tube connection G (BSP) (ISO 228-1) and other tube connections (NPT (ANSI 1.20.3)) are available on request.
- TORK solenoid valves 97/23/EC, are available for pressure equipment directive (PED) and 2006/95/ECC low voltage directive (LVD).

Drinking Water Solenoid Valve
S1510 Series (G3/8", G1/2", G3/4",G1", G11/4", G11/2", G2")

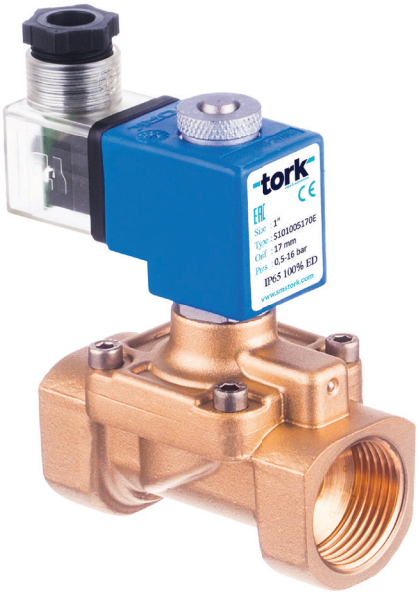

NORMALLY CLOSED
2 WAY
PILOT OPERATED
ΔP=0,5

WATER

GENERAL FEATURES
- Wide pressure range, a flow rate and orifice options.
- Appropriately designed solenoid valve to NSF.
- Solenoid valves are used with the filter.
- Solenoid valves can be mounted in any position without affecting its operation.
- Coil to be used in a vertical position.

ELECTRICAL CHARACTERISTICS
Continuous Duty : ED %100
Coil Insulation Class : H (180°C)(IEC 85)
Coil Impregnation : Polyester Fiber Glass
Ambient Temperature : -20°C, +60°C
Protection Degree : IP65 (ISO 60529) On request; IP68
Electric Plug Connection : DIN 46340 3- Poles Connector (DIN43650)
Connector Specification : ISO 4400 / EN 175301-803 Form A, Spade Plug (Cable Ø6-8 mm)
Electrical Safety : IEC 335
Standard Voltages : AC 12V 15VA, 24V 15VA, 48V, 15VA, 110V 15VA, 230V 15VA, 230V 24VA
DC 12V 18W, 24V 18W, 48V,18W, 110V 18W
On request other voltages
Voltages Tolerance : AC -15%, +10% DC -5%, +10%
Frequency : 50 Hz (60 Hz...)
On request; Connector with LED, PWM Socket
Specify coil voltage with order

MATERIALS IN CONTACT WITH FLUID
Body : Appropriate brass for NSF
Internal Parts : Stainless Steel
Sealing : Aprropriate rubber for NSF
Shading Ring : Copper (EN 12735-1)
Seats, Core Tube, Springs: Stainless Steel

OPTIONS
Female connection: BSP; (On request NPT)
- On request Atex (exproof) coil.

TECHNICAL FEATURES
Max. Viscosity : 5°E (~37cST veya mm²/s)
Response Time : Opening time : 400 ms - 1600 ms
Closing Time : 1000 ms - 2000 ms

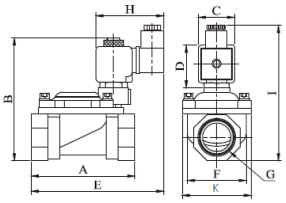

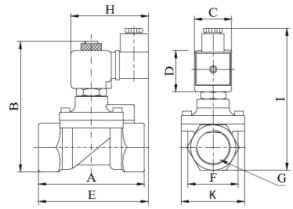

Dimensions (mm)								
G	A	B	C	D	E	H	I	K
3/8"	72	97.7	32	45	94.8	76	109	52.5
1/2"	80	99.2	32	45	96.2	76	110.5	52.5
3/4"	78	106	32	45	97.2	76	117.3	52.5
1"	85	112.5	32	45	98.7	76	123.8	52.5
11/4"	106.5	124.5	32	45	-	76	135.8	72
11/2"	128.5	137	32	45	-	76	148.3	95
2"	149	149	32	45	-	76	160.3	109.7

Coils	Nominal Values	Cold/ Hot	Inrush	Holding	Current (A)	Surface Temperature (°C)
C40012VDC18W	12VDC 18W	COLD	19,56	19,56	1,63	20
		HOT	14,52	14,52	1,21	106
C40024VDC18W	24VDC 18W	COLD	20,88	20,88	0,87	25
		HOT	14,64	14,64	0,61	116
C40110VDC18W	110VDC 18W	COLD	19,96	19,96	0,18	23
		HOT	13,56	13,56	0,123	115
C40012VAC15VA	12VAC 15VA	COLD	23,81	16,43	1,3	25
		HOT	-	15,86	1,262	79
C40024VAC15VA	24VAC 15VA	COLD	25,82	15,02	0,62	22
		HOT	-	13,91	0,57	81
C40110VAC15VA	110VAC 15VA	COLD	30,65	15,17	0,137	24
		HOT	-	13,96	0,126	80
C40230VAC15VA	230VAC 15VA	HOT	31,4	15,64	0,068	25
		HOT	-	14,41	0,063	80
C40230VAC24VA	230VAC 24VA	COLD	45,1	23,92	0,0154	23
		HOT	-	21,62	0,0154	100

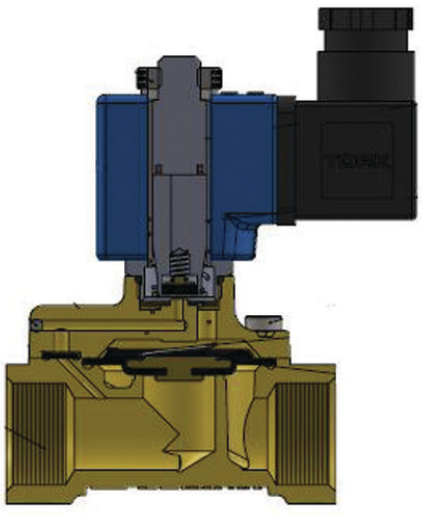

Solenoid Vave Symbol	Valve Type/ Order No	Connection Size	Orifice Size	Pressure min/max		Kv	Seal	Weight
	S1510	G	mm	Bar	Bar	l/min	Appropriate rubber for NSF	kg
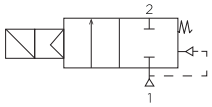	S1510.02.125	3/8"	12.5	0.5	16	48	✓	0,69
	S1510.03.145	1/2"	14.5	0.5	16	70	✓	0,73
	S1510.04.170	3/4"	17	0.5	16	90	✓	0,81
	S1510.05.170	1"	17	0.5	16	90	✓	0,98
	S1510.06.300	11/4"	30	0.5	12	250	✓	2,65
	S1510.07.390	11/2"	39	0.5	12	370	✓	2,55
	S1510.08.460	2"	46	0.5	12	450	✓	2,98

Not: Please look catalogues for more details

STANDARDS
- Standard tube connection G (BSP) (ISO 228-1) and other tube connections (NPT (ANSI 1.20.3)) are available on request.
- TORK solenoid valves 97/23/EC, are available for pressure equipment directive (PED) and 2006/95/ECC low voltage directive (LVD).

TS1510EN260403