General Purpose Solenoid Valves S1015 Series (G1/8", G1/4")

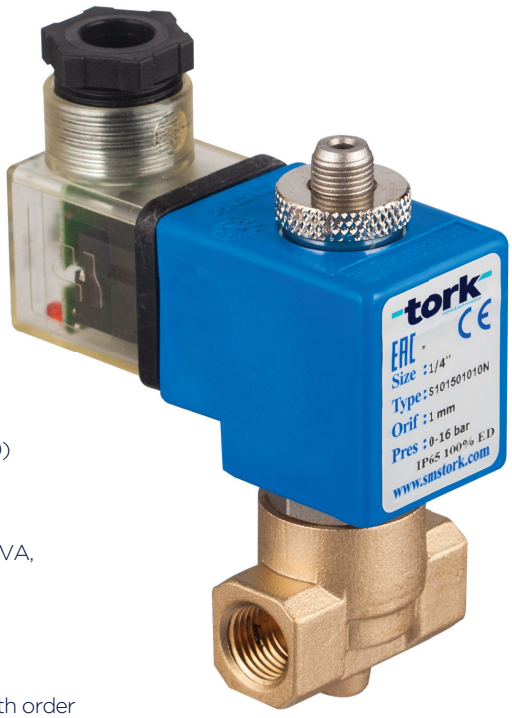

NORMALLY CLOSED
3 WAY
DIRECT ACTING
ΔP=0

WATER AIR GAS

GENERAL FEATURES

- Wide pressure range, a flow rate and orifice options.
- Solenoid valves are used with the filter.
- Solenoid valves can be mounted in any position without affecting its operation.
- Coil to be used in a vertical position.

ELECTRICAL CHARACTERISTICS

Continuous Duty	: ED %100
Coil Insulation Class	: H (180°C)(IEC 85)
Coil Impregnation	: Polyester Fiber Glass
Ambient Temperature	: -20°C, +60°C
Protection Degree	: IP65 (ISO 60529) On request; IP68
Electric Plug Connection	: DIN 46340 3- Poles Connector (DIN43650)
Connector Specification	: ISO 4400 / EN 175301-803 Form A, Spade Plug (Cable Ø6-8 mm)
Electrical Safety	: IEC 335
Standard Voltages	: AC 12V 15VA, 24V 15VA, 48V, 15VA, 110V 15VA, 230V 15VA, 230V 24VA DC 12V 18W, 24V 18W, 48V,18W, 110V 18W

On request other voltages

Voltages Tolerance	: AC -15%, +10% DC -5%, +10%
Frequency	: 50 Hz (60 Hz...)

On request; Connector with LED, PWM Socket Specify coil voltage with order

MATERIALS IN CONTACT WITH FLUID

Body	: Brass
Internal Parts	: Stainless Steel
Sealing	: VITON (On request; NBR, EPDM)
Shading Ring	: Copper (EN 12735-1)
Seats, Core Tube, Springs	: Stainless Steel

OPTIONS

Female connection: BSP; (On request NPT)

- On request CR-Ni plated, PTFE coated done
- On request Atex (exproof) coil.

TECHNICAL FEATURES

Max. Viscosity : 5°E (~37cST veya mm^2/s)
Response Time : Opening time : 30 ms
Closing Time : 30 ms

SEALS FEATURES

NBR : -20°C...+80°C
EPDM : -30°C...+130°C
VİTON : -20°C...+160°C
PTFE : -10°C...+160°C
RUBY : -10°C...+160°C

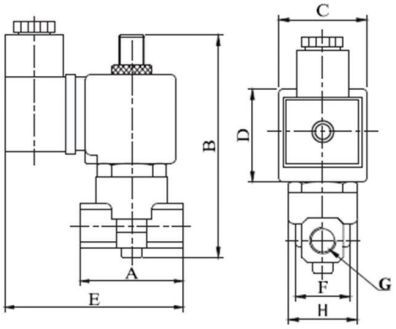

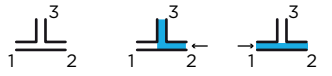

1 = Input
2= Output
3= Exhaust

De-Energized (2→3) Exhaust

Energized (1→2)

Dimensions (mm)							
G	A	B	C	D	E	F	H
1/8"	40	89	32	39	78	22.3	25.6
1/4"	40	89	32	39	78	22.3	25.6

Coils	Nominal Values	Cold/ Hot	Inrush	Holding	Current (A)	Surface Temperature (°C)
C40012VDC18W	12VDC 18W	COLD	19,56	19,56	1,63	20
		HOT	14,52	14,52	1,21	106
C40024VDC18W	24VDC 18W	COLD	20,88	20,88	0,87	25
		HOT	14,64	14,64	0,61	116
C40110VDC18W	110VDC 18W	COLD	19,96	19,96	0,18	23
		HOT	13,56	13,56	0,123	115
C40012VAC15VA	12VAC 15VA	COLD	23,81	16,43	1,3	25
		HOT	-	15,86	1,262	79
C40024VAC15VA	24VAC 15VA	COLD	25,82	15,02	0,62	22
		HOT	-	13,91	0,57	81
C40110VAC15VA	110VAC 15VA	COLD	30,65	15,17	0,137	24
		HOT	-	13,96	0,126	80
C40230VAC15VA	230VAC 15VA	HOT	31,4	15,64	0,068	25
		HOT	-	14,41	0,063	80
C40230VAC24VA	230VAC 24VA	COLD	45,1	23,92	0,0154	23
		HOT	-	21,62	0,0154	100

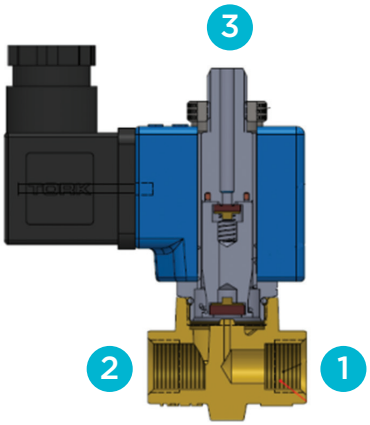

Solenoid Vave Symbol	Valve Type/ Order No	Connection Size	Orifice Size	Pressure min/max		Kv	Seal			Weight
								Opsiyon		
	S1015	G	mm	Bar	Bar	l/min	NBR	Viton	EPDM	kg
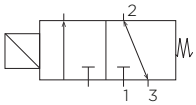	S1015.00.018	1/8"	1.8	0	6	1.6	✓	✓	✓	0,37
	S1015.00.025	1/8"	2.5	0	3	3.2	✓	✓	✓	0,37
	S1015.01.018	1/4"	1.8	0	6	1.6	✓	✓	✓	0,36
	S1015.01.025	1/4"	2.5	0	3	3.2	✓	✓	✓	0,36

Not: Please look catalogues for more details

STANDARDS

- Standard tube connection G (BSP) (ISO 228-1) and other tube connections (NPT (ANSI 1.20.3)) are available on request.
- TORK solenoid valves 97/23/EC, are available for pressure equipment directive (PED) and 2006/95/ECC low voltage directive (LVD).