tork
valve & automation

GR70-GR40 TSEK 607 GAS REGULATORS

USER MANUEL

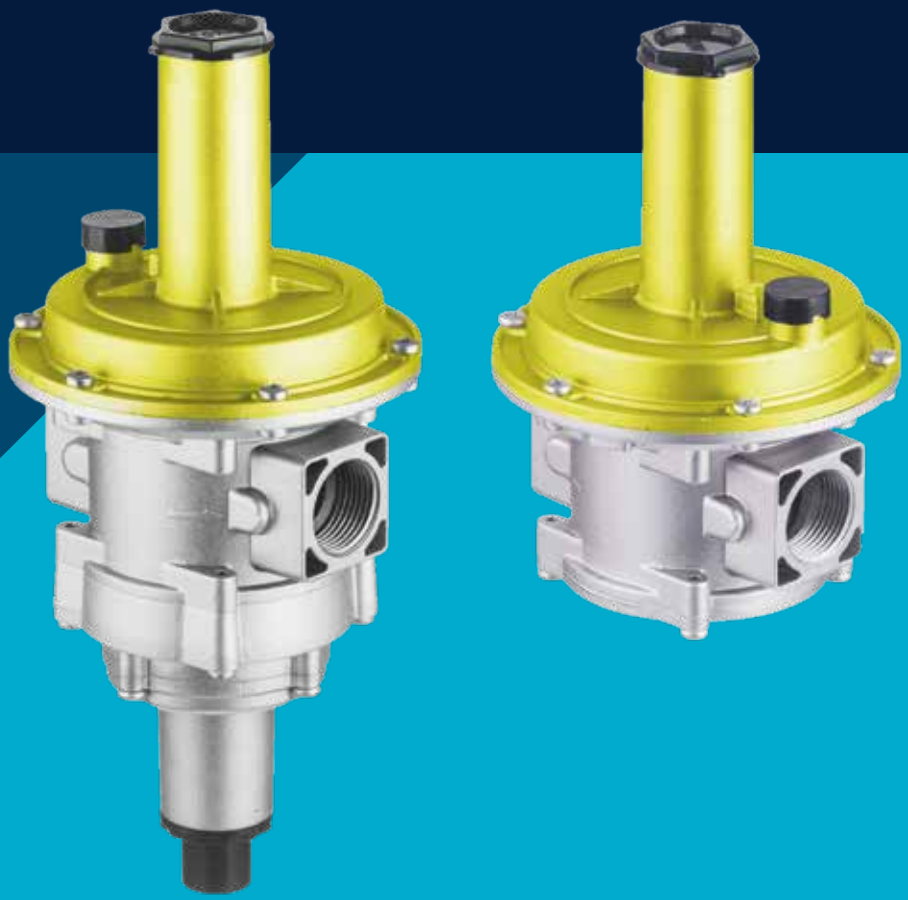

OCTOBER 2026

PLEASE READ THE INSTRUCTIONS BEFORE USE!

EAC CE 2354 UL SIL 3 ROHS TSEK TSEK 607 ATEX bsi. ISO 9001 Quality Management ISO 14001 Environmental Management ISO 45001 AI management systems ISO 10002 Customer Satisfaction

www.smstork.com

WARNING
Please read and save.

WARNING
All information explained in this user manual should only be made by authorized services or authorized personnel.

WARNING
Installation, adjustment, use and maintenance work done against the instructions may cause injury and material damage. Therefore, read this manual carefully before using the device. This device must be installed according to the current technical regulations.

DECLARATION OF CONFORMITY
As the manufacturer, we declare that the CE marked GR 70 product complies with the 97/23 directive. Products marked in accordance with the regulations are the same as the samples checked by the competent authority no. 0036. GR 40 products have been produced in accordance with the relevant technical regulations and their compliance with TS K607 standards has been certified by TSE. Quality assurance of the products has been provided in accordance with ISO 9001-2008.

1-DESCRIPTION
GR 70 It is the device that reduces the variable inlet pressure in the gas network to the desired level by the outlet and keeps it constant at this level automatically and is equipped with a safety device against an increase or decrease in the regulated outlet pressure more than allowed. The safety shut-off regulator consists of the regulator part that reduces the inlet pressure to the outlet pressure, and a safety shut-off valve that cuts the gas flow in case of undesired pressure changes. The closing value of the safety shut-off valve is adjusted according to the outlet pressure. Thanks to the safety shut-off system it includes, the safety shut-down regulator automatically switches on to ensure the safety of the devices used in the system and cuts the gas flow in the line, in case the outlet pressure goes above or below the set value. In order for the regulator and the gas flow in the system to be reopened, the safety shut-off valve must be re-installed manually and the calibration process must be performed, as explained below, after the reasons causing the shutdown are eliminated. Filtered safety shut-off gas pressure regulators are safe, high-performance gas pressure regulators that can be used in industrial and domestic areas, have an inlet pressure of up to 1 bar, can be used to contain dust, dirt and particles carried by gas thanks to the filter cartridge inside, and to prevent clogging of subsequent devices (meter, burner). They are long-lasting, wide and variable output pressure, intermittent, spring-loaded pressure regulation regulators.

GR 40 Filtered gas pressure regulators can be used in industrial and domestic areas and can automatically keep the pressure of non-corrosive gases with a maximum inlet pressure of 1 bar at a lowering value thanks to the spring setting that can be manually adjusted, thus enabling the safe operation of gas-burning devices such as stoves, burners and combi boilers. They are safe, high-performance, long-lasting, wide and changeable outlet pressure range, spring-loaded pressure-adjustable regulators that can be used to contain dust, dirt and parts carried by gas thanks to the filter cartridge inside, and to prevent clogging of the following devices (meter, burner).

2-MODEL NO:
Our GR 70 and GR 40 model regulators are divided into 8 subgroups according to their nominal diameters, as seen below.
Table-1

Connection Diameter	Model No
DN25	GR-70.05
DN32	GR-70.06
DN40	GR-70.07
DN50	GR-70.08

Connection Diameter	Model No
DN25	GR-40.05
DN32	GR-40.06
DN40	GR-40.07
DN50	GR-40.08

23 - WORKING PRINCIPLE, AREAS OF USAGE, DETAILED - BASIC - TECHNICAL INFORMATION AND FEATURES
Our GR 70 model regulators are regulators that can reduce the pressure on the line and keep it constant at the lowered value by manually tightening or loosening the springs on the top cover, which are selected upon request, and are equipped with a safety device against more than allowed rise or fall in the regulated outlet pressure. Our regulators are resistant to a maximum inlet pressure of 1 bar and they also have a safety membrane that will prevent the gas flow to the environment in case of rupture of the main membrane.

USAGE AREAS FOR GR 70
City grids and industrial uses

FLUID TYPE
Natural Gas, LPG, Methane, Propane, Butane, City Gazi, Air etc. non-corrosive gases (gas group 3)



Ambient Temperature: -20° C/60° C
Maximum Surface Temperature: 60 ºC
Max. Input and Max. Working Pressure: 1 bar and 200mbar
Output Pressure Adjustment Range: 35-200 mbar (Output pressure value can be changed or adjusted by selecting the springs in Table-2.)
Shutdown Stress: less than 1 second
Maximum safety pressure adjustment range: 30-450 mbar
Minimum safety pressure adjustment range: 5-30 mbar
Threaded Connection: DN 25, DN 32, DN 40, DN50 Nominal Diameter Threaded Connection
Filter and Class: 5 micron, G2 (filters with different pore diameters, 50 micron etc. if needed) Materials: Body and cover aluminum, filter rustproof braided washable and removable synthetic fiber, sealing o-rings and gaskets 3 groups, eyes-resistant H- NBR.

Product, Material and Certification Standards
Aluminum and Aluminum Alloys: TS EN 1706
Brass and Copper Alloys: TS EN 12449, TS En 12164
Stainless Steels: TS EN 10088
Filter: TS EN 779
Springs: TS EN 15800
Gasket, Membrane and O-rings (NBR rubber): TS EN 549
Threaded Connection: TS EN ISO 228-1
Nylon Materials: EN 11667
Flanged Connections: TS EN 1092-1
Certification Standard: Our products comply with TSE K 607 standard and 97/23/EC directive.

POS NO	NAME OF PART	UNIT
1	Body	1
2	Flange Cap	1
3	Funnel	1
4	Safety Bottom Cap	1
5	Regulator Top Diaphragm	1
6	Regulator Bottom Diaphragm	1
7	Regülator Diaphragm Upper Disc	1
8	Regulator Diaphragm Bottom Disc	1
9	Nut	1
10	Washer	1
11	Screw	3
12	Regulator Compensation Diaphragm Bearing Washer	1
13	Regulator Compensation Diaphragm Carrier Central Pin	1
14	Central Pin Seat	1
15	Safety Cap O-ring	1
16	Compression O-ring	1
17	Regulator Diaphragm Carrier	1
18	Safety Closing Seat Carrier	1
19	Safety Closing Screw	4
20	Flange Cap Screw Bottom O-ring	4
21	Flange Cap Gasket	1
22	Regulator Compensation Diaphragm	1
23	Funnel Srews	6
24	Flange Cap Screws	4
25	Safety Funnel Screws	4
26	Anti Dust Tube	1
27	Regulation Tap	1
28	Regulation Tap O-ring	1
29	Regulation Screw	1
30	Spring Compresşon Part	1

POS NO	NAME OF PART	UNIT
31	Regulation Pressure Setting Spring	1
32	Fitler	1
33	Safety Funnel	1
34	Regulator Orfice Part	1
35	Safety Compensation Diaphragm	1
36	Nut	1
37	Safety Closing O-ring	1
38	Safety Seat Compression Spring	1
39	Regulator Carrier Shaft O-ring	1
40	Safety Closing O-ring	1
41	Safety Closing Inside O-ring	1
42	Washer	1
43	Safety Closing Compensation Diaphragm Carrier	1
44	Safety Closing Seat	1
45	Ball	3
46	Safety Compensation Diaphragm Carrier O-ring	1
47	Low Pressure Inside Spring	1
48	Hihg Pressure Outside Spring	1
49	Clip	1
50	High Pressure Copmression Washer	1
51	Minimum Process Safety Closing Setting Screw	1
52	Maximum Process Safety Closing Setting Screw	1
53	Safety Closing Pin	1
54	Safety Tap O-ring	1
55	Safety Tap	1
56	Safety Setup Pin	1
57	Repulse Pipe	1

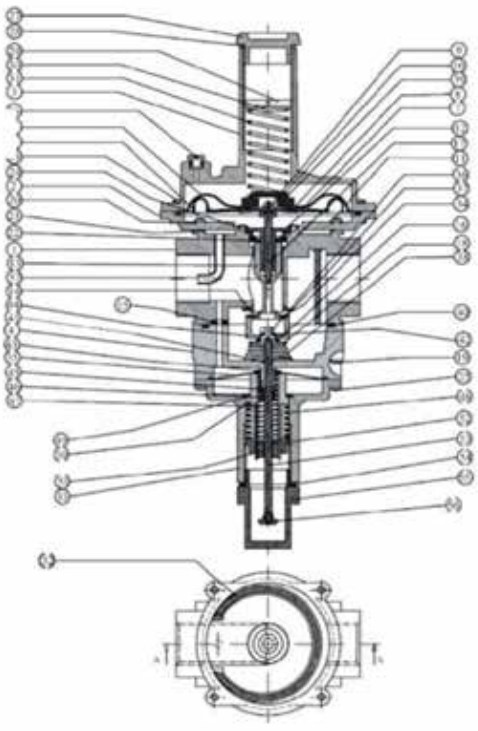

Figure-1 GR 70 Model DN 25 Nominal Diameter TORK Filtered Gas Regulator with Safety Shutdown Product Tree



Our GR 40 model regulators are regulators that can reduce the pressure on the line and keep it constant at the reduced value, thanks to the manual tightening or loosening of the springs, which are located on the upper cover and can be selected upon request. Our regulators are resistant to a maximum inlet pressure of 1 bar and they also have a safety membrane that will prevent the gas flow to the environment in case of rupture of the membrane.

USAGE AREAS FOR GR 40

City grids and industrial uses

FLUID TYPE

Natural gas, lpg, methane, propane, butane, city gas, air etc. non-corrosive gases (gas group 3)

Ambient Temperature: -20° C/60° C
Maximum Surface Temperature: 60 ºC
Max. Input and Max. Working Pressure: 1 bar and 200mbar
Output Pressure Adjustment Range: 10-500 mbar (Output pressure value can be changed or adjusted by selecting the springs in Table-2)
Shutdown Stress: less than 1 second
Maximum safety pressure adjustment range: 30-450 mbar
Minimum safety pressure adjustment range: 5-30 mbar
Threaded Connection : DN 25, DN 32, DN 40, DN 50 Nominal Diameter Threaded connection.
Filter and Class: 5 micron, G2 (Different pore diameter filters, 50 micron etc., if needed)
Materials: Aluminum body and cover, non-corrosive filler, washable and removable synthetic fiber, o-rings and gaskets that provide sealing, 3-group gas-resistant H-NBR.
Product, Material and Certification Standards
Aluminum and Aluminum Alloys: TS EN 1706
Brass and Copper Alloys: TS EN 12449, TS EN 12164
Stainless Steels: TS EN 10088
Filter: TS EN 779
Springs: TS EN 15800
Gasket, Membrane and O-rings (NBR rubber): TS EN 549
Threaded Connection : TS EN ISO 228-1
Nylon Materials: EN 11667
Certification Standard: Our products comply with TSE K 607 standards and 97/23/EC directive.

POS NO	NAME OF PART	UNIT
1	Body	1
2	Flange	1
3	Funnel	1
4	Bottom Cap	1
5	Outer Diaphragm	1
6	Inner Diaphragm	1
7	Compensation Diaphragm	1
8	Bottom Cap Seal	1
9	Flange O-ring	1
10	Central Pin Scal	1
11	Tap O-ring	1
12	Flange Seal O-ring	4
13	Diaphragm Upper Disc	1
14	Diaphgram Lower Disc	1
15	Central Pin Set Screw	1
16	Central Pin Set Screw Nut	1
17	Central Pin Set Screw Washer	1
18	Central Pin	1
19	Filter	1
20	Compensation Diaphragm	1
21	Spring Regulation Screw	1
22	Spring Washer	1
23	Spring	1
24	Tap	1
25	Blowback Tube	1
26	Anti Dust Tube	1
27	Flange	4
28	Bottom Cap Seals	6
29	Compensation Diaphragm Screw Seals	4
30	Compensation Diaphragm Screw Ring	1
31	Funnel Screw Seals	6
32	Blowback Tube O-ring	1
33	Diaphragm Lower Disc O-ring	1

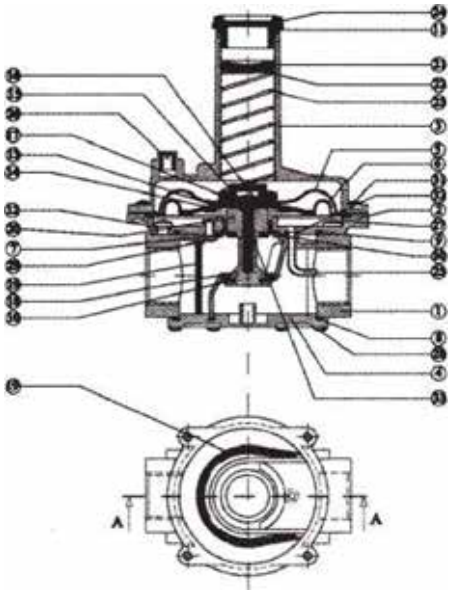

Figure-2 GR 40 Model DN 25 Nominal Diameter TORK Filtered Gas Regulator Product Tree

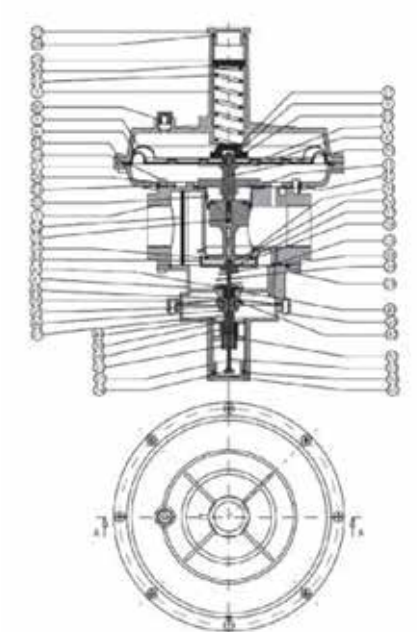

POS NO	NAME OF PART	UNIT
1	Body	1
2	Cap	1
3	Big Funnel	1
4	Flange Cap	1
5	Regulator Top Diaphragm	1
6	Regulator Bottom Diaphragm	1
7	Regulator Diaphragm Upper Disc	1
8	Regulator Diaphragm Bottom Disc	1
9	Upper Central Pin Nut	1
10	Upper Central Pin Washer	1
11	Compensation Diaphragm Compression Screws	3
12	Upper Central Pin Addition Part	1
13	Central Pin	1
14	Central Pin Seat	1
15	Releif O-ring	1
16	Closing Spring O-ring	1
17	Upper	1
18	Closing Spring Addition Part	1
19	Flange Cap Screws	6
20	Cap Screw O-ring	6
21	Cap O-ring	1
22	Regulator Compensation Diaphragm	1
23	Tall Funnel Screws	8
24	Cap Screws	6
25	Short Funnel Screws	6
26	Anti Dust Tube	1
27	Regulation Tap	1
28	Regulation Screw	1
29	Spring Compression Part	1
30	Regulation Pressure Setting Spring	1

POS NO	NAME OF PART	UNIT
31	Regulation Pressure Setting Spring	1
32	Fitle	1
33	Short Funnel	1
34	Regulator Orfice Part	1
35	Safety Closing Diaphragm	1
36	Nut	1
37	Safety Closing O-ring	1
38	Safety Closing Spring	1
39	Regulation Diaphgram Carrier Shaft	1
40	Safety Closing Shaft Bearing Washer	1
41	Bearing Washer O-ring	1
42	Safety Diaphgram Fixing Washer	1
43	Safety Closing Diaphragm Carrier	1
44	Safety Closing Seat	1
45	Safety Diaphgram Fixing Nut	3
46	Spring Compression Washer	1
47	Low Pressure Inside Spring	1
48	High Pressure Outside Spring	1
49	Clip	1
50	Safety Closing Setting Body	1
51	Safety Closing Inside Setting Screw	1
52	Safety Closing Outside Setting Screw	1
53	Safety Closing Pin	1
54	Tapa o-ringi	1
55	Tap	1
56	Safety Setup Pinr	1

Figure-3 GR 70 Model DN 32 - DN 40 - DN 50 Nominal Diameter Gas Regulator with Filter and Safety Shutdown Product Tree

A-A Section

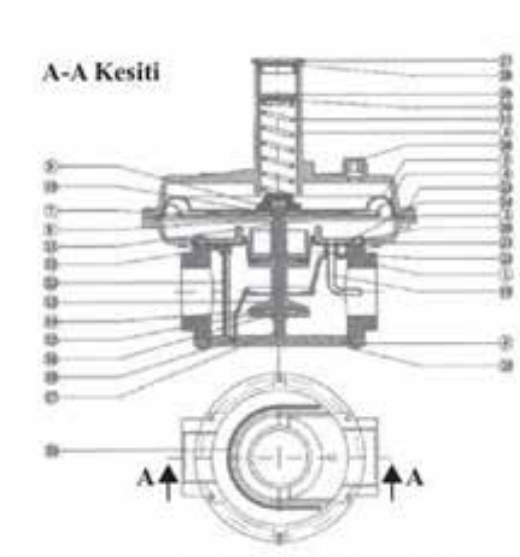

Body
Flange
Funnel
Bottom Cap
Outer Diaphragm
Inner Diaphragm
Diaphragm Upper Disc
Diaphragm Lower Disc
Control Pin Shafty Nut
Central Pin Shafty Washer
Central Pin Bearing
Compension Diaphragm Carrier
Central Pin Seat
Cental Pin Shaft O-ring
Central Pin Shaft
Bottom Cap Seat

POS NO	NAME OF PART	UNIT
1	Body	1
2	Flange	1
3	Funnel	1
4	Bottom Cap	1
5	Outer Diaphragm	1
6	Inner Diaphragm	1
7	Diaphragm Upper Disc	1
8	Diaphragm Lower Disc	1
9	Central Pin Shaft Nut	1
10	Central Pin Shaft Washer	1
11	Central Pin Bearing	1
12	Compression Diaphragm Carrier	1
13	Central Pin	1
14	Central Pin Seal	1
15	Central Pin Seal Screw Washer	1
16	Central Pin Shaft O-ring	1
17	Central Pin Shaft	1
18	Bottom Cap Seal	1
19	Sensor Tube	1
20	Flange Screw O-ring	6
21	Flange O-ring	1
22	Compansation Diaphragm	1
23	Funnel Fixing Screw	3
24	Flange Screws	6
25	Bottom Cap Screws	6
26	Anti Dust Tube	1
27	Tap	1
28	Tap O-ring	1
29	Regulation Screw	1
30	Washer for Spring	1
31	Setting Spring	1
32	Filter	1

Figure-4 GR 40 Model DN 32 - DN 40 -DN 50 Nominal Diameter TORK Filtered Gas Regulator Product Tree

It is mounted in front of the regulation organs in the regulator gas lines to control the pressure.

TORK brand regulators can provide the technical features required by the directive as a device within the scope of the 3G and 3D class of the gas group. (Equipment Group No. II, Category No. 3). Equipment Group No. II, Category No. 3 includes devices designed to provide normal level of protection. The device in this category should be used in areas where the possibility of explosive atmosphere formation is rare or where it is likely to occur for a very short time. It is suitable for use in zones I and 21, as well as in zones 2 and 22, as per the 99/92/EC directive. Our regulators are not suitable for use in zones 0 and 20 specified in 99/92/EC.

As a result of damage to the regulator's operation or safety diaphragm, it may pose a danger to other devices around the regulator in the installation; only in this case the regulator can discharge gas into the environment and cause the formation of an explosive atmosphere in zone 0 as defined in the 99/92/EC directive.
There is a control pressure plug outside the regulator, at the system outlet, to control the holding pressure.

If the device is installed, used and maintained in accordance with the technical instructions and conditions in this document, it does not constitute a source of danger. It is not possible to cause a flammable environment especially during normal operation. You can refer to the EN 60079-10 standard for classification of hazardous areas. The filter cartridge is made of washable and removable synthetic material, and the gasket that provides sealing is made of NBR material.

Output pressure adjustment ranges can be adjusted and changed by using different springs in our GR 70 and GR 40 model gas regulators. Adjustable outlet pressure ranges of our regulators according to nominal diameters and spring properties are shown in Table-2 and Table-3 below.

Input Pressure	Spring Code	Connection Diameter Used	Adjustable Output Pressure Range (mbar)	Spring Marking Color
Maximum 1 Bar	GY-02	DN 25	14-40	Yellow
Maximum 1 Bar	GY-04	DN 32 - DN 40	14-25	Blue
Maximum 1 Bar	GY-04	DN 50	14-25	Blue

Table-2 GR70 Model Regulators Spring Selection Table

Input Pressure	Spring Code	Connection Diameter Used	Adjustable Output Pressure Range (mbar)	Spring Marking Color
Maximum 1 Bar	GY-02	DN 25	16-35	Sarı
Maximum 1 Bar	GY-08	DN 32 - DN 40 - DN50	14-24	Sarı

Table-3 GR40 Model Regulators Spring Selection Table

Safety pressure adjustment ranges can be adjusted and changed by using different springs in our GR 70 and GR 40 model gas regulators. The maximum and minimum safety pressure ranges that can be adjusted according to the nominal diameters and spring properties of our regulators are shown in Table-4 below.

Input Pressure	Spring Code	Connection Diameter Used	Adjustable Output Pressure Range (mbar)	Spring Marking Color
Maximum 1 Bar	GY-26	DN 25 - DN 32 DN 40 - DN 50	5-30	White

Table-4 GR40 and GR70 Model Regulators Safety Shut-Off Spring Selection Table

4-INSTALLATION

•As described below, the installation and assembly process should only be done by certified authorized and expert technicians and authorized companies-services who have received approval from the gas approval authorities, but the end user should not perform these operations.

•The regulator is normally mounted before the user. It should be mounted with the arrow on the body pointing to the user, so that the flow will be from the mains to the user. Connect the product to the male outer part of the line by tightening it with a wrench and check the tightness. The regulator can be mounted in any position due to the mounting method, but it should be preferred to mount the regulator cover and thus its spring in a vertical and upward-facing position. (It is not recommended to mount the regulator cover in the downward facing position). Regulators should be mounted on horizontal pipes. If necessary, prefer mounting on vertical pipes. The output pressure of the regulator can be checked with the test nipple on the output side of the body. Mount each regulator so that its calibration can be done on site.

• We recommend that you install a filter in front of each facility.
•Before assembly, it should be checked that the line pressure does not exceed the maximum pressure level on the product label.
• Before assembly, remove the strainer plastics from the inlet and outlet of the regulator.
• Before assembly, clean every installation with air.
•The product's dimensional dimensions and line compatibility should be checked before assembly.
•Before the assembly process, it should be ensured that the pipes are clean and aligned.
•Before assembly, it should be checked that there is no axis misalignment on the line to which the regulator will be connected.
•Before the assembly, it should be ensured that the gas supply is turned off and that there is no pressurized gas in the line where the regulator will be installed, and that such a possibility is avoided during the assembly, so that the hand valve used before the regulator and providing the gas flow to the regulator is closed.
• Before mounting, it should be checked that the mounting location is at a distance that will not be affected by sparks and electric currents that may arise from flammable materials and devices.
•Before assembly, it should be checked that there are no particles, dirt, etc. foreign matter on the line to which the regulator will be connected.
• Before the installation, the necessary vent points should be left in the installation to evacuate the live line.
•Inert gas should be applied on the natural gas installation used before the cutting and welding works to be done during the assembly.
• During installation, possible gaskets, sawdust and metal parts should be prevented from entering the product.
•The product should not be exposed to excessive load and impact while assembling. Connect without mechanical tension.
•Use gasket materials that are approved for use in assembly.
• Do not apply hand force from the cover or body during assembly, assemble with a suitable wrench.,
•After the assembly process is finished, check that you have not mounted the regulator upside down.
•After installation, always check the gas tightness of the system.

Example mounting shape and dimensions of the product are given below.

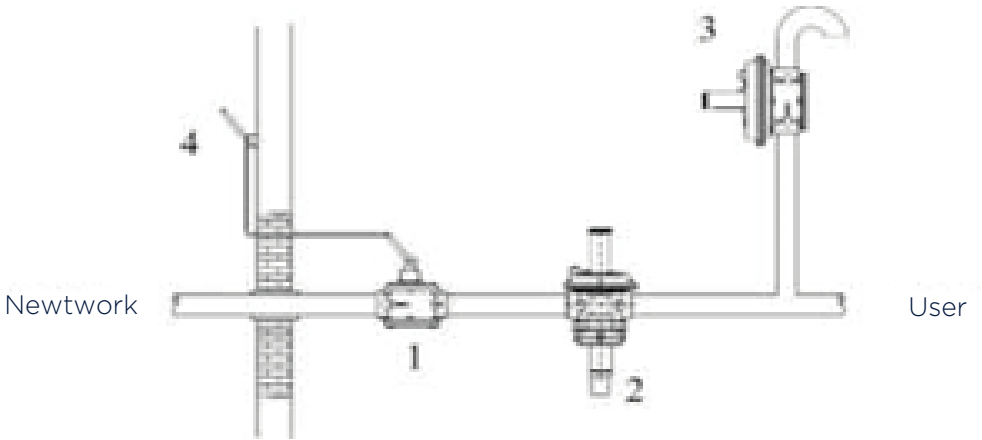

- Manually operated ball on-off valve
- GR70 model safety shut-off gas regulator
- TORK-DT Relief valve
- Hand-operated ball valve with remote control handle

Figure-5 GR 70 Model DN 25 Filtered Gas Regulator Assembly and Line Diagram

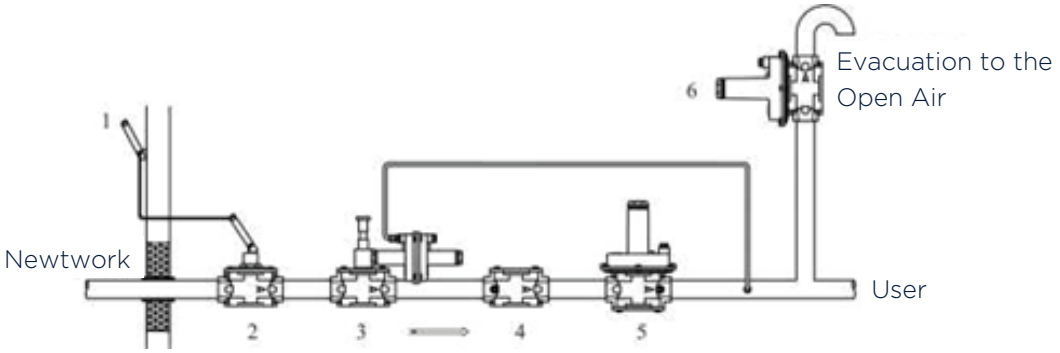

Figure-6 GR 40 Model Gas Regulator with Filter Assembly and Line Diagram

- Hand-operated ball valve with remote control handle
- Manually operated circular on-off valve
- Safety shut-off valve
- GF-10 model gas filter
- GR-40 model gas regulator

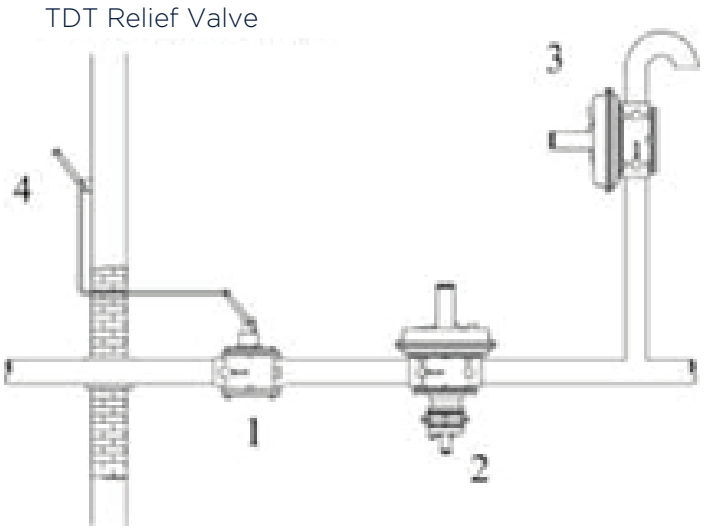

Figure -7 GR 70 Model DN 32 - DN 40 - DN 50 Filtered Gas Regulator Assembly and Line Diagram

- Manually operated ball on-off valve
- GR70 model safety shut-off gas regulator
- TORK-DT Relief valve
- Hand-operated ball valve with remote control handle

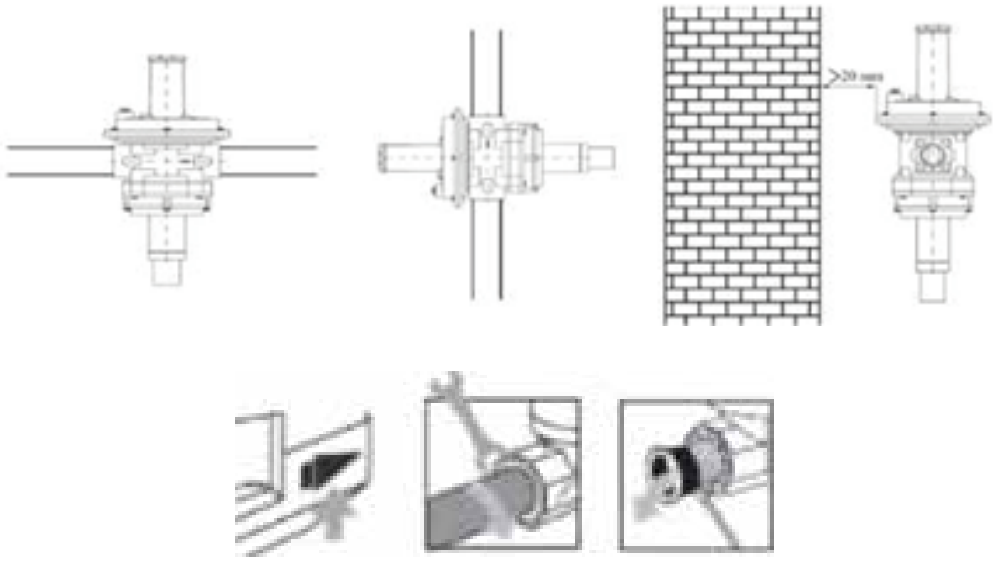

Above are examples of correct assembly. The body must not touch the wall.
A distance of at least 20 mm should be left between the body and the wall.

FRO GR70 :

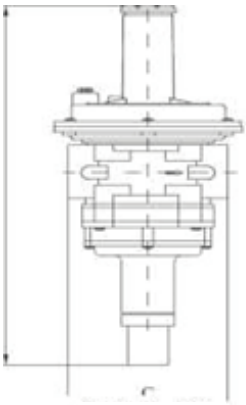

DN25

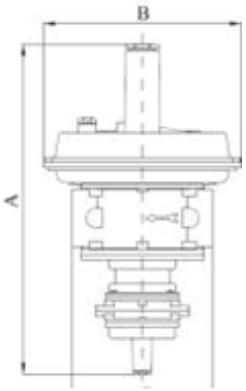

DN32 - DN40 - DN50

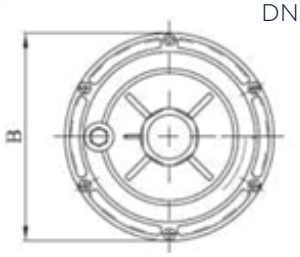

FOR GR40 DN25 - DN32 - DN40 - DN50

Table-7 Dimensions:

Model No	Connection Diameters	A (mm)	B (mm)	C (mm)	Filter Surface Area	Weight (kg)
GR-70.05	DN25-1"	187	140	120	6149	1,11
GR-70.06	DN 32-11/4"	243	225	160	13916	3.20
GR-70.07	DN 40-11/2"	243	225	160	13916	3.19
GR-70.08	DN50-2"	243	225	160	13916	3.28

Model No	Connection Diameters	A (mm)	B (mm)	C (mm)	Filter Surface Area	Weight (kg)
GR-40.05	DN25-1"	325	140	120	7682	1,83
GR-40.06	DN 32-11/4"	327	220	160	10354	3.20
GR-40.07	DN 40-11/2"	327	220	160	10354	3.19
GR-40.08	DN50-2"	327	220	160	10354	3.28

5 - CALIBRATION, SELECTION, FLOW CONVERSION, OUTPUT PRESSURE AND REPLACEMENT

GR70 MANUAL INSTALLATION:

Our products come out of our factory in accordance with the user demand, with the safety pressures adjuste and the crown closed. Therefore, the installation process of our product on the customer line should be done as follows

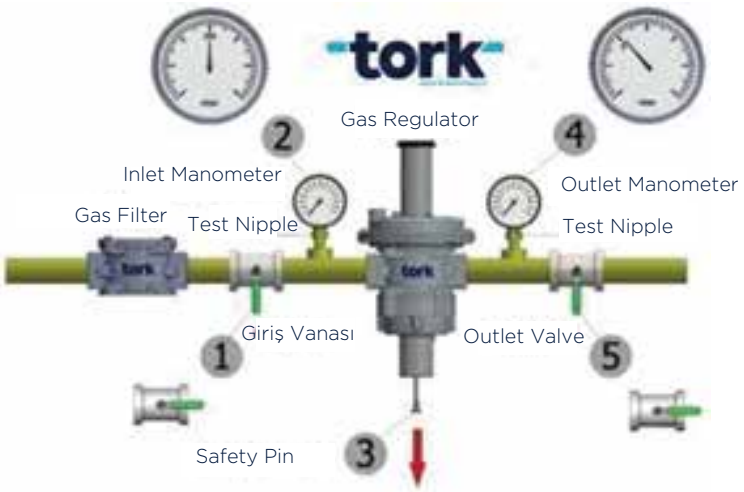

•Open the inlet valve slowly in 4 stages.
•Confirm 3Oombar on the inlet manometer. Open the plug 55 by turning it counterclockwise. Pull the safety pin 56 and wait for 5 seconds.
•Confirm 21 mbar on the outlet manometer.
•Open the outlet valve slowly in 4 stages.
Assemble the plug 55 by turning it clockwise by hand.

CALIBRATION FOR GR 70

Our products are not adjusted to the minimum safety closing pressure as standard. This setting is made on request. Therefore, there is a minimum safety shutdown system in our standard products, but it is disabled. To enable and install the minimum safety shutdown, the requirements in B below must be done.

If the user wants the regulator to close at both maximum safety shutdown and minimum safety shutdown, this information should be given to us in the order conditions. Because in our standard products, only maximum safety is active unless there is a special request from the customer.

CALIBRATION FOR GR40

Before the system starts to work, make sure that the spring in the regulator can meet the desired pressure values. Open the inlet ball valve (Number 2 in Figure-3) slowly and gradually in order to provide pressure to the regulator.

(Never open the inlet ball valve quickly.) After removing the plastic plug on the regulator, loosen the adjusting screw and the spring all the way and adjust the outlet pressure to the desired value by turning the adjusting screw clockwise slowly. The output pressure of the regulator can be checked with the test nipple on the output side of the regulator.

A) SETTING THE MAXIMUM SAFETY CLOSING PRESSURE AND OUTPUT PRESSURE FOR GR 70

- Slowly open the inlet ball valve in the gas inlet direction.
- Remove plugs 27 and 55 by turning them counterclockwise.
- Remove the safety pin 56 by turning it counterclockwise.
- Tighten the maximum safety shut-off (high pressure safety shut-off) screw number 52 by turning it clockwise with a 22 socket wrench.
- Screw the safety pin number 56 into the threaded hole by turning it clockwise.
- Loosen the regulation screw for which you made the output pressure settings, as much as possible by turning it counterclockwise (to perform the installation process).
- Pull out the crown (double pin 56) and install the regulator. In this case, verify that there is gas flow through the regulator.
- Turn the regulation screw clockwise to bring the outlet pressure to the desired maximum safety closing pressure.
- Loosen the maximum safety shut-off (high pressure safety shut-off) adjusting screw counterclockwise very slowly to decrease by 1 mbar per second until the regulator closes and verify the shut-off. Thus, the maximum safety closing pressure is set.
- Loosen the regulation screw for which you have adjusted the outlet pressure, by turning it counterclockwise and decrease the outlet pressure. (To be able to install)
- Pull out the crown (safety pin 56) and install the regulator. In this case, verify that there is gas through the regulator.
- Bring the outlet pressure to the desired outlet pressure by turning the regulation screw clockwise. (Make sure that the outlet pressure you have adjusted does not reach the maximum safety closing pressure.)
- Replace the plugs 27 and 55 by turning them clockwise and complete the calibration.

SETTING CONTROL FOR GR 70:

Increase the adjusted outlet pressure by turning the regulation screw clockwise and ensure that the outlet pressure reaches the maximum safety closing pressure you have set before, and see that the shutdown process is completed. (It should be taken into account that the closing pressure may be within the tolerances given on the labels.) Afterwards, loosen the regulation screw for which you have adjusted the outlet pressure, by turning it counterclockwise and decrease the outlet pressure. Pull the crown out and set the regulator. In this case, verify that there is gas passage through the regulator (If you have trouble installing, consider the WARNING-2 explained below) Adjust the outlet pressure to the desired outlet pressure and finish the check.

WARNINGS:

UYARI-1: For the item: Do not open the inlet ball valve quickly all at once.

WARNING-2: For items 7 and 11: If you cannot install the assemble lever or if you have a problem closing the regulator at a value you do not want, try to loosen the regulation screw by turning it counterclockwise a little more. Do this delay until the assemble lever is installed. Apart from this process, if the regulator is set to close at both maximum and minimum safety closing pressure, make sure that the output pressure you have decreased does not enter the minimum safety shutdown range. loosen it by turning it and thus eliminate the possibility that the minimum safety pressure will come into play and prevent the adjustment of the maximum safety pressure and regulation pressure, or make sure that the outlet pressure you have adjusted is set at a pressure above the minimum safety closing pressure range.

WARNING-3: For item 8: If the regulator closes before you can bring the outlet pressure to the desired safety pressure, reduce the outlet pressure, pull the assemble lever, turn the maximum safety closing adjustment screw a little more clockwise and bring the outlet pressure to the desired safety pressure. Do this and repeat until you bring the outlet pressure to the desired safety pressure.

WARNING-4: For item 12: While performing this operation, verify that the outlet pressure you want to set is not more than the maximum safety closing pressure that you have adjusted before.

WARNING-5: When setting the maximum safety shut-off pressure, make sure that the minimum safety shut-off adjustment screw is in the loosest position before the 1st step, in other words, the minimum safety shut-off is disabled. If it is not disabled, loosen the minimum safety shut-off adjusting screw number 51 counterclockwise to the end so that the assembly is not disturbed.

B) SETTING THE MINIMUM SAFETY CLOSING PRESSURE FOR GR 70

As an important information, it is necessary to set the maximum safety closing pressure first and then the minimum safety closing pressure, if it is to be done.

• Remove plugs 27 and 55 by turning them counterclockwise

• Check the condition that the maximum safety closing pressure and the outlet pressure are adjusted and the regulator is installed. If not suitable, satisfy this requirement doing the above operations. Before starting the calibration, also check that the minimum safety closing adjustment screw number 51 is completely loose so that the regulator does not close unnecessarily during the outlet pressure adjustment.

• Turn the regulation screw number 29 clockwise to bring it to the minimum safety closing pressure.

• Tighten the minimum safety shut-off adjusting screw clockwise at a slow rate of 50k increments of 1 mbar per second until the regulator closes and verify the shut-off. Thus, the minimum safety closing pressure is set.

• Tighten the regulation screw for which you have adjusted the outlet pressure, by turning it clockwise, and increase the outlet pressure by being careful not to reach or exceed the maximum safety closing pressure (To be able to install)

• Screw the crown number 56 into the threaded hole by turning it clockwise.

• Pull the crown out and set the regulator. In this case, verify that there is gas through the regulator.

• Adjust the outlet pressure to the desired outlet pressure by using the regulation screw. (taking care not to reach or exceed the maximum safety shut-off pressure.)

• Replace the plugs 27 and 55 by turning them clockwise and complete the calibration.

SAMPLE CALIBRATION FOR GR 70:

Desired outlet pressure: 30 mbar
Maximum Safety Pressure: 45 mbar
Minimum Safety Pressure: 13 mbar

• Slowly open the inlet ball valve in the gas flow direction gradually.
• Remove plugs 27 and 55 by turning them counterclockwise.
• Turn the assemble lever number 56 clockwise by turning it counterclockwise.
• Tighten the maximum safety closing screw number 52 by turning it clockwise with a 22 socket wrench.
• Screw the assemble lever number 56 into the threaded hole by turning it clockwise.
• Loosen the regulation screw number 29, which you have adjusted the outlet pressure, as much as possible by turning it counterclockwise.
• Pull the assemble lever out and set the regulator. In this case, verify that there is gas through the regulator.
• Turn the regulation screw clockwise to bring the outlet pressure to 45 mbar.
• Loosen the maximum safety shut-off adjusting screw counterclockwise very slowly until the regulator closes to decrease I mbar per second and verify the shut-off. Thus, the maximum safety closing pressure is set.
•To reopen the closed regulator by pulling on the crown, turn the regulation screw counterclockwise to reduce the outlet pressure to a value below 45 mbar. (To be able to install)
• Pull the assemble lever out and set the regulator. In this case, verify that there is gas through the regulator.
• Set the outlet pressure to 30 mbar by turning the regulation screw and finish the calibration process.
• Increase the adjusted outlet pressure of 30 mbar by turning the regulation screw clockwise and advance the outlet pressure to 45 mbar and see that the shutdown process is completed. (It should be taken into account that the closing pressure may be within the tolerances given on the labels.) Afterwards, turn the regulation screw for which you have adjusted the outlet pressure counterclockwise and reduce the outlet pressure. Pull the assemble lever out and set the regulator. In this case, verify that there is gas passage from the regulator (If you have trouble installing, consider the WARNINGl-2 explained below.) Adjust the outlet pressure to 30 mbar and complete the control.
• Remove plugs 27 and 55 by turning them counterclockwise
• Also check that the minimum safety closing adjustment screw number 51 is completely loose so that the regulator does not close unnecessarily during the outlet pressure adjustment.
•Turn the regulation screw clockwise to bring the outlet pressure to 13 mbar.
• Tighten the minimum safety shut-off adjusting screw clockwise very slowly at 1 mbar increments per second until the regulator closes and verify the shut-off.
• Tighten the regulation screw for which you have adjusted the outlet pressure by turning it clockwise and increase the outlet pressure above 13 mbar. (Being careful not to reach or exceed the maximum safety closing pressure) (To be able to install)
• Screw the assemble lever number 56 into the threaded hole by turning it clockwise.
• Pull the crown out and set the regulator. In this case, verify that there is gas through the regulator.
• Adjust the outlet pressure to 30 mbar using the regulation screw (taking care not to reach or exceed the maximum safety closing pressure)
• Replace the plugs 27 and 55 by turning them clockwise and complete the calibration.

WARNING: In case of selection of regulation springs adjusted to high output pressures, tighten the springs with a hand gun with a screwdriver blade.

WARNING: If you have difficulty manually removing the springs from their seat in the tubular cover when replacing thick regulation springs that produce high output pressures, try to remove the spring with a tool that compresses it from the inside out.

WARNING: While tightening and adjusting all the springs used in the regulator, care must be taken not to over tighten the pressure values given on the labels so as not to exceed the upper limits. Otherwise, the values corresponding to the spring will increase and decrease irregularly; In such a case, loosen the springs enough to bring them to pressures that can meet the label values.

SELECTION:

The choice of regulator 50k is important. While making the selection, these values should be known since the inlet pressure in the line, the desired outlet pressure, the safety closing pressure and the desired flow rate values will be used. When choosing the product, the model that can meet the desired flow rate is selected from the Table-8 below. The springs that can give the desired outlet pressure and safety pressure for the model following this process are selected from Table 2-4-5 and the selection process is completed. The appropriate outlet pressure range is determined by different spring selections. It is recommended to avoid ascent speeds above 30m/s. Select a top diameter for better regulation at high exit rates. When choosing the regulators, 10% deviation should be taken into account. While choosing the regulator, the smallest regulator that can give the desired flow rate at the relevant pressure losses should be selected. The capacity and pressure loss table of the gas regulator is given below. The table is used when selecting the product.

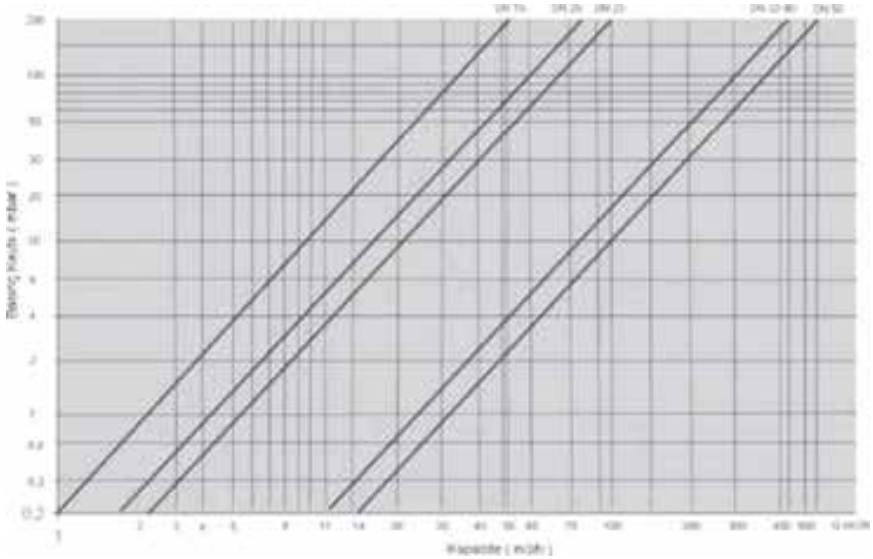

Table-8 Filtered Regulator Pressure Loss And Capacity Table For Gr 70 And Gr 40 (For Natural Gas)

The maximum volume flow in relation to the pressure gradient between the inlet pressure and the outlet pressure determines the nominal construction of the regulator.

The operating point defined via AP and flow rate in the selection is located to the left of the nominal diameter to be selected. This is the main criterion for selection.

Example regulator selection:
Line inlet pressure: Pl : 50 mbar
Desired outlet pressure from the line: P2 : 20 mbar
Required output flow: Q : 20 m3/h
Considering the above values, the desired API is found as 50-20:30 mbar.

From the 20m3/h point, which is the desired flow rate in Table-8, a vertical vertical rises up and the points where the vertical line intersects the curves are marked. Different models of pressure losses are found for the intersection point of each curve by deducing horizontal lines to the left from these marked points. The regulator, which has the curve that covers the point closest to SOmbar in the pressure loss values found during the selection, is chosen because it is the smallest regulator that can give the desired flow rate. (As a result, the smallest regulator that meets the desired AP > AP of the regulator should be selected). As it can be seen in the Table-9 below, while the P1, P2, P3 and P4 points remain below 30mbar, the P5 value corresponds to a value above 30mbar. For this reason, P5 is left out of the selection, while P4 point is chosen because it is the smallest regulator among other points, with the value closest to 30 mbar. As it can be seen in Table-9 below, the Gr70 840 model for Gr70, the GR 40 04 model for GR 40, since the pressure loss value (approximately 16 mbar) is the closest to 30 mbar, this model is the most suitable model for us to give the flow rate we want. After the model selection is made, considering the Table-2 for GR 70 and Table-3 for GR40, it is determined that the spring that can provide the output pressure of 20 mbar for this model is the GY 02 spring, and the regulator selection is completed.

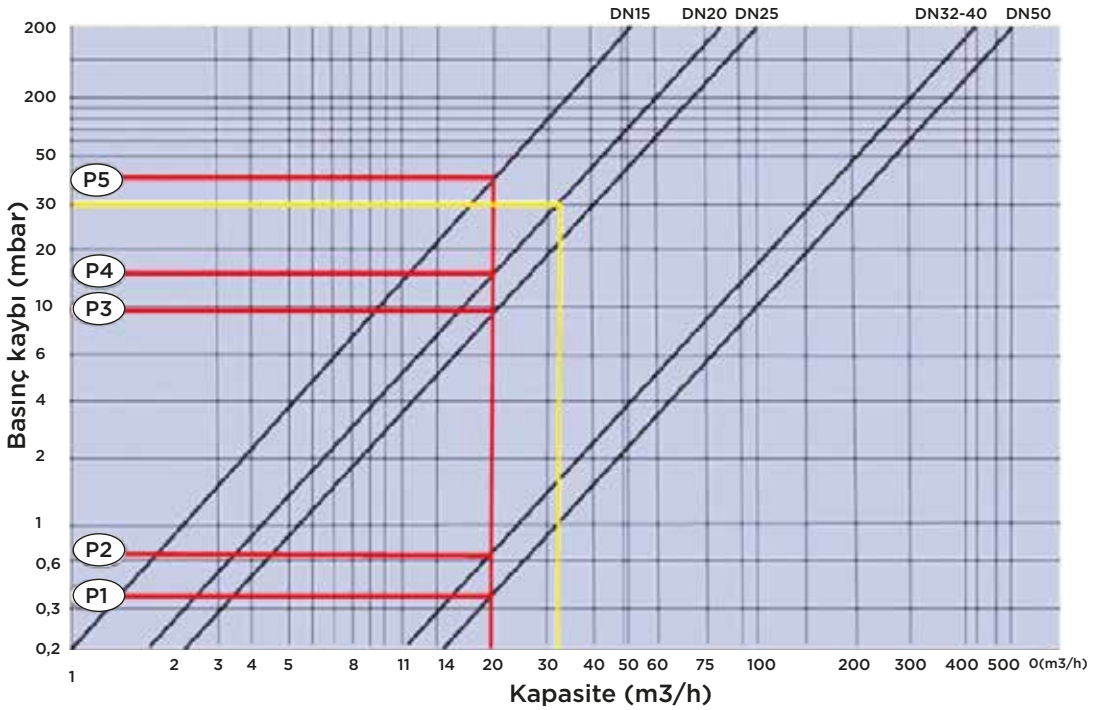

Tablo-9 GR 70ve GR 40 Örnek Seçim Tablosu

Flow Conversion

The flow rates and flow capacity table above have been prepared for natural gas. In case our regulator is used in a gas other than natural gas, the flow rate of the said other gas is calculated according to the following flow conversion formula.

•Ql:Q2xK
•Q1: Gas Flow Rate (m3/h)
•Q2: Flow Rate of Natural Gas (m3/h) selected in the capacity table
•K: Flow Conversion coefficient (selected from Table-9)

Fluid Type	Relative Density of Gas (dv) (Kg / m3)
Hydrogen	0,06
City Gas	0,45
Natural gas	0,62
Carbon Monoxide	0,94
Nitrogen	0,97
Air	1
Oxygen	1,07
Lpg	1,56
Butane	2,01

Fluid Type	Low Conversion Coefficient (K)
Hydrogen	3,04
City Gas	1,17
Carbon Monoxide	0,81
Nitrogen	0,80
Air	0,78
Oxygen	0,76
Lpg	0,63
Butane	0,56

Table-11 Flow Conversion Coefficients

Changing the Outlet Pressure: Unscrew the number 27 plug by hand by turning it counterclockwise.
When the regulation screw is tightened clockwise with a suitable screwdriver or apparatus, the outlet pressure will begin to increase, while when it is turned counterclockwise, the outlet pressure will begin to decrease. With this method, you can change the outlet pressure and after the process is finished, replace the plug and turn it clockwise and complete the outlet pressure change process.

ATTENTION: The pressure adjustment spring must be tightened more than necessary in order to set a pressure above the pressure values specified on the label. Otherwise, the outlet pressure may become irregular or the product may malfunction.

Spring Change: If the desired output pressure cannot be adjusted with the spring connected to the regulator, the spring that matches the desired output pressure is selected from Table-2. The plug no 27, the regulation screw (29), the regulation plug o-ring (28), the spring pressure element (30), and finally the regulation pressure element (30), which are seen in Figure-1, Figure-2, Figure-3 and Figure-4, respectively. Remove the adjustment spring (31) from the regulator tube cover (3). Attach the spring you chose from Table 2. Set the desired outlet pressure as above and repeat the above spring replacement procedure in reverse order to finish the process. After this process, remove the label from the packaging bag and sweat it under the regulator type. Write the adjusted outlet pressure on the label legibly.

ATTENTION: The assembly area of the adjusting spring must not be exposed to flammable gas and flammable gas-air mixtures.

6. MAINTENANCE AND REPAIR

The maintenance, repair and cleaning works described below should only be carried out by authorized and certified technicians and authorized companies - services that have received approval from gas approval institutions. Definitely the end user should not do these operations. The user or unauthorized persons should never interfere with the product or even in case of any maintenance, malfunction or repair.

The user is responsible for maintaining the product and making sure that it is working at intervals (it is recommended not longer than 1 year) determined by the system conditions in which the product is used. When cleaning or maintenance is required according to the usage conditions, the product can be removed from the line.

Before removing the regulator from the line for maintenance, repair or replacement, make sure that there is no pressurized gas in the line, that this condition is set to be met until the process is completed, that the hand valve used before the regulator and that provides the gas flow to the regulator is closed. To check or replace the GR 70 Diaphragm, remove the long tube cover (23) bolts and remove the large tube cover (3). After checking by removing the upper seat shaft nut (9), upper seat shaft washer (10), diaphragm upper sheet (7), outer diaphragm (5), diaphragm lower sheet (8), inner diaphragm (6) respectively, replace them in order. When reassembling the parts, make sure that the diaphragms are correctly installed in their places and channels and that the outer diaphragm does not rotate when tightening the upper seat shaft nut.

To check the filter cartridge in the threaded body; Open the bowl-safety cover bolts (numbered 19) and separate the safety closing group from the regulator main body without carefully shaking it. Wash the filter cartridge (number 32) with soapy water and dry it with compressed air or replace if necessary. Then, reattach the filter to the body so that it fits into its appropriate channels. For Gr40, before removing the regulator from the line for maintenance, repair or replacement, make sure that there is no pressurized gas in the line, that this condition is set to be met until the process is completed, that the hand valve used before the regulator and that provides the gas flow to the regulator is closed. To check or replace the diaphragm; unscrew the tubular cover bolts and lift the cover, remove the outer diaphragm, loosen the fixing nut that fixes the inner diaphragm. Reassemble by doing the reverse of the same process, hold the diaphragm top sheet by hand while tightening the nut, taking care not to rotate the diaphragm. To check the filter cartridge in the threaded body, unscrew the bottom cover bolts and remove the bottom cover. Remove the filter cartridge, wash it with soapy water and dry it with compressed air or replace if necessary. Then, reattach the filter to the body so that it fits into its appropriate channels. Reassemble the bottom cover making sure the spindle is inserted into the bottom cover hole.

Reinstall the dismantled parts by performing the same operations backwards and finish the maintenance process. Install the regulators, whose maintenance process is completed, by following the instructions in the assembly section. Before mounting the regulator on the line after maintenance and repair, absolutely use suitable sealing elements (Teflon tape, external conical union, etc.) to ensure tightness. After the maintenance and repair, definitely check the tightness of the regulator, if necessary, use foam to make this check.

ATTENTION: This order must be strictly followed, otherwise a malfunction may occur in the regulator.
In case the fluid passing through the regulator is biogas, maintenance and function control should be done every 6 months.
When necessary, we can supply springs, diaphragms, o-rings, filters, etc., which are the spare parts of our products. You can get the lower parts from our factory.
If the product becomes unusable, a new one should be purchased by contacting our factory.
Call us for detailed technical information, spare parts, authorized services and maintenance-repair problems.

7- ISSUES TO BE CONSIDERED AND WARNINGS

It is strongly recommended to use our product in all gas lines so that the arguments in the system are not damaged.

Especially in critical installation conditions (unprotected areas, poor ventilation, inadequate service and maintenance) or when flammable materials or dangerous devices are close to the regulator during normal operation; In order to be protected from electric arc or spark effects, the suitability of the distance between the regulator and these devices should be evaluated before installation and during operation. Because in such cases, potential triggers may be in question and a dangerous situation may occur. In addition, preventive measures must be taken to avoid the possibility of the regulator creating a 0th field, that is, an explosive field source, in any case. (For example, with regular periodic maintenance, the possibility of changing the emission level of the source or the removal of explosive materials around can be provided. To do this, the copper pipe is extended to the non-hazardous area by removing the brass part in the breather of the regulator and 1/4" union).
Before assembly, it should be checked that there is no damage to the product and that the necessary parts are complete.

If it is seen that there is damage or missing parts, the product should not be received. Before starting to use our products, the label and other information on the product and box should be checked. Before assembly, it should be checked that the line pressure does not exceed the maximum pressure level on the product label. Before assembly, the compatibility of the product to be installed with the system to be used should be checked. The working limits specified in the technical specifications section should not be exceeded and the product should not be pressurized more than the maximum pressure.

Before mounting, make sure that the arrow on the regulator body is towards the end user. Before the assembly, it should be ensured that there is no gas in the line where the regulator will be installed and that such a possibility is prevented during the assembly. Before assembly, use appropriate sealing elements (Teflon tape, external cone cracker, etc.) or make sure that the sealing is provided. While examining the efficiency of the product's operation, carefully check that there is no leakage from the point where it is connected to the line. It should be ensured that the products are correctly connected to the line and that the connections are made correctly. Mount the regulator and all other arguments in accordance with the directions of use. Check that you have not mounted the regulator upside down. Do not install regulators on vertical pipes. In some mandatory cases, it can be installed in flow from top to bottom. Assemble each gas armature with the expectation that it will be inserted and maintained in the future.

Since the regulators may need to be removed from the installation for maintenance and repair, use a union, manometer or ball valve at the inlet and outlet of the regulator. Also, do not push test air from the outlet. Make the calibration settings. Make sure that the outer connection of the line is not long. If it is longer than necessary, damage to the product body may occur during tightening and assembly. The regulation valves (for safety and maintenance purposes) that can be connected to the inlet or outlet of the regulator upon customer's need should be opened and closed slowly. (Regulation valves are not a system with a regulator, it is recommended to be used.) During the assembly and disassembly of the regulator, absolutely perform the operation from the connection part by using a key. Do not perform cutting and welding operations on the gas installation used without filling inert gas.

When examining the efficiency of the product's operation, it should be ensured that it is connected to the line in a solid and leak-proof way. The regulator should not be approached with electrical and flammable materials. Do not give test air from the outlet side during the installation, maintenance or repair of the regulator. When the smell of gas is detected, the main inlet valve in front of the regulator should be closed and the authorized service should be informed. In the meantime, the environment should be ventilated. When the regulator needs to be removed from the line for any reason, first of all, it should be ensured that the pressure in the line is cut off. Regulators should be protected from sun and rain.

NOTE: The packaged label in the regulator box is for sticking to the regulator by noting the new outlet pressure adjusted after the spring change made by the user.

8-USER ERRORS, FAULTS, CAUSES AND CONSEQUENCES

When faced with malfunction situations, some examples of which are given below, the end user should definitely not intervene and should inform the authorized service or us.

If a pressure higher than the pressure specified in the technical specifications section above comes to the regulator, the device may break down and there will be a constant high and unadjustable pressure transition on the outlet side. A high rate of dust coming from the line may clog the cartridge of the regulator over time, in this case, there will be a decrease in the gas flow in the line in the future, in such a case, we should be contacted for maintenance and repair. If you have any doubts about the gas leak on the line where the regulator is installed, contact the authorized company that installed the product on our line or us as soon as possible. (Such a situation can be understood from the constant increase of the pressure on the outlet side without changing the spring setting, or from the gas smell in the environment.)

If the output pressure of the product is constantly increasing, there is a problem in the diaphragm system and the product is faulty. If there is noise or hum on the line, the product fails. Under normal operating conditions, when there is no problem on the line and on the user's side, the regulator does not provide the initial pressure settings and the outlet side If it cannot give the regulated pressure that it should give or does not give pressure at all, the product is defective. If the outlet pressure cannot be adjusted, the product is faulty.

If the regulator gives a pressure above the pressure values specified on the output pressure label, the product has failed. In such a case, the regulating spring should be loosened by turning the adjusting screw counterclockwise. In this case, if the problem persists, the spring must be removed and reinstalled. If the pressure continues to increase in its final state, the product has failed. If it is understood that the product has made a mistake in the measurement, the assembly explanations should be reviewed and the assembly should be done correctly.

9-TRANSPORT-SHIPPING

All of our regulators are placed in special cardboard boxes to prevent damage during transportation and shipping. During transportation and transportation, products should not be thrown away, weight should not be placed on them that could damage them, they should not be shaken by impact and they should not be left in wet places. Damages during transportation and transportation belong to our company.

10-WARRANTY TERMS AND PERIOD OF USE

1-The warranty period starts from the delivery date of the goods and this period is 2 years against manufacturing defects.
2- The repair period of the goods is 30 business days at the most.
3- In case of malfunction of the product due to manufacturing faults within the warranty period, it will be repaired without any charge.
4-Defects caused by the use of the product contrary to the points specified in this manual (incorrect assembly, exceeding the working limits specified in the technical specifications section, using in areas different from the features specified in the order, not taking the necessary protection measures, etc.) are not covered by the warranty.
5-The user is responsible for making the features and assembly available in the system where the product will be used. Therefore, our company is not responsible for any malfunctions that may occur.
6-The products should not be used other than the terms and conditions specified in this manual. Any damages that may arise from the products used outside the terms and conditions specified in this manual belong to the user.
7-Service and spare parts are provided by our company.
8-The product's useful life as determined by the ministry is 10 years.
9-The products should not be used other than the terms and conditions specified in this manual. Any damages that may arise from the products used outside the terms and conditions specified in this manual belong to the user.

WARRANTY CERTIFICATE

Manufacturer / Importer: SMS Sanayi Malzemeleri Üretim ve Satışı A.Ş.

Address : Merkez: Y.Dudullu Mh. Bostancı Yolu Kuru Sk. No:16
Ümraniye - İstanbul / Türkiye
Factory : İMES O.S.B 2. Cd. No: 5 Çerkeşli OSB Mh.
Dilovası - Kocaeli / Türkiye

Product : Natural Gas Regulator
Brand : TORK
Model :
Delivery Date and Place : .....
Warranty Time : 2 years
Maximum Repair Time : 20 working days
Seller / Distributor : .....
Address : .....
.....
.....
.....
.....

Manufacturer / Importer Authority
Name-Surname: Enver KAYA
Signature :
Date :
Stamp :

Seller / Distributor Authority
Name-Surname:
Signature :
Date :
Stamp :

NOTE

NOTE

tork

valve & automation

USR.GR70-40 /211026/Rev.01EN

Head Office : Bostancı Yolu Cad, Kuru Sok, No16 Y. Dudullu, 34776 Ümraniye / İstanbul - Türkiye
Factory : Çerkeşli OSB Mah. İmes 2. Cad. No.5 41455 Dilovası / Kocaeli - Türkiye

P +90 216 364 34 05 **F** +90 216 364 37 57
P +90 262 290 20 20 **F** +90 262 290 20 21

SMS SANAYİ MALZEMELERİ ÜRETİM VE SATIŞI A.Ş.

/SMSTORK /sms-tork www.smstork.com